HITACHI

PA

No. 0185

50VX500*	LC37E
50V500A	LC37E
60VX500	LC37F

SERVICE MANUAL

NTSC

LC37/E/F Chassis

R/C: CLU-5729TSI

This addendum includes all information necessary for the 50VX500, 50V500A and 60VX500, except information that is the same as the 50V500 and 60V500A. All features/adjustments for 50VX500, 50V500A and 60VX500 are the same as 50V500 and 60V500A. Please refer to Service Manual PA No. 0178 when servicing model 50VX500, 50V500A and 60VX500.

CONTENTS

The electrical and mechanical parts list only lists parts that are different from Service Manual PA No. 0178.

Electrical Parts Differences . . . . . 2 Updated 07/12/05
50” Exploded View Drawings 4
50” Exploded View Parts List . . . . . .8 Updated 07/12/05
60” Exploded View Drawings 9
60” Exploded View Parts List . . . . . .13 Updated 07/12/05

NOTE: This product is to be serviced at board level.

NOTE: If a part does not list in this addendum, please refer to Service Manual PA No. 0178. For model 50VX500, refer to model 50V500 (50”) in Service Manual PA No. 0178. For model 50V500A and 60VX500, refer to model 60V500A (60”) in Service Manual PA No. 0178.

CAUTION: These servicing instructions are for use by qualified service personnel only. To reduce the risk of electric shock do not perform any servicing other than that contained in the operating instructions unless you are qualified to do so.

SAFETY NOTICE
USE ISOLATION TRANSFORMER WHEN SERVICING

Components having special safety characteristics are identified by a ⚠ on the schematics and on the parts list in this Service Data and its supplements and bulletins. Before servicing the chassis, it is important that the service technician read and follow the “Important Safety Instructions” in this Service Manual.

*** The 50VX500 has been changed to the LC37E chassis. Please refer to the LC37E when servicing the 50VX500.**

SPECIFICATIONS AND PARTS ARE SUBJECT TO CHANGE FOR IMPROVEMENT

LCD REAR PROJECTION TELEVISION

SEPTEMBER 2003 HHEA-MANUFACTURING DIVISION

Version 0185.03

ELECTRICAL PARTS DIFFERENCE TABLE

Model Name	50V500	60V500A	50V500A	50VX500	60VX500
Chassis	LC37	LC37F	LC37E	LC37	LC37F
Optical Engine Ass'y	UX22201D*	UX22203D*	UX22202D*		UX22203D*
Drive PWB Ass'y	JP06781	JP07192	JP07191	JP06781	JP07192
Signal PWB Ass'y	JT24141	JT24144	JT24143	JT24141	JT24144
-I001	CK39571U	CK39572U	CK39572U	CK39571U	CK39572U
Power Supply PWB	JT24161	JT24164	JT24163	JT24161	JT24164
-C926	--	AJ00182F	AJ00182F	--	AJ00182F
-C954	0800363N	--	--	0800363N	--
-C955	0800363N	--	--	0800363N	--
-C956	0800363N	--	--	0800363N	--
-CAE3	0258616	0258901	0258616	0258616	0258901
-CAE4	0258616	0258902	0258617	0258617	0258902
-D931	CH02673R	--	--	CH02673R	--
-D941	2344041M	--	--	2344041M	--
-I911	CP05164F	--	--	CP05164F	--
-K932	JUMPER	--	--	JUMPER	--
-K9Z2	--	JUMPER	JUMPER	--	JUMPER
-K9Z3	--	JUMPER	JUMPER	--	JUMPER
-K9Z4	--	JUMPER	JUMPER	--	JUMPER
-K9Z5	--	JUMPER	JUMPER	--	JUMPER
-L923	2125811N	--	--	2125811N	--
-L936	2125811N	--	--	2125811N	--
-R971	JUMPER	--	--	JUMPER	--
-R980	AT03879	--	--	AT03879	--
-R9A5	0700045M	--	--	0700045M	--
Owner's Ass'y	UK06411	UK06411	UK06411	UK06412	UK06412
-Instruction Book	QR57024	QR57024	QR57024	QR58981	QR58981
-Simple Remote (R/C)	--	--	--	HL01861	HL01861
-Simple R/C Battery	--	--	--	FR00061	FR00061
F/C Unit	CS00771	CS00772	CS00772	CS00771	CS00772
LPW (Ferrite Core)	--	GX00662	GX00662	--	GX00662

* suffix 'D' added to indicate Dud Fee is now included

Notes:
Beside the parts difference listed above, please refer to Service Manual PA NO. 0178 for all other electrical parts.

Model 50VX500 has been changed from LC37 to LC37E

50VX500 - refer to model 50V500A.

LCD Rear Projection TV
Major Assembly Parts List - By Model

50V500

HA01231	Lamp Power Unit
UX21511	Lamp Assy
JT24141	Signal PWB Assy, (includes Terminal and DVI PWB)
JT24161	Power PWB
JT24171	Control PWB
UX22201D*	Optical Engine Assy, (includes Drive and FC4 PWB)
X480263	Audio PWB, (includes Main and Sub PWB)
UE22341	LC37 Chassis

50VX500 **This model has been changed to LC37-E chassis**

HA01231	Lamp Power Unit
UX21511	Lamp Assy
JT24143	Signal PWB Assy, (includes Terminal and DVI PWB)
JT24163	Power PWB
JT24173	Control PWB
UX22202D*	Optical Engine Assy, (includes Drive and FC4 PWB)
X480266	Audio PWB, (includes Main and Sub PWB)
UE22343	LC37-E Chassis

50V500A (same as 50VX500 except screen/cabinet)

HA01231	Lamp Power Unit
UX21511	Lamp Assy
JT24143	Signal PWB Assy, (includes Terminal and DVI PWB)
JT24163	Power PWB
JT24173	Control PWB
UX22202D*	Optical Engine Assy, (includes Drive and FC4 PWB)
X480266	Audio PWB, (includes Main and Sub PWB)
UE22343	LC37-E Chassis

60V500A

HA01231	Lamp Power Unit
UX21511	Lamp Assy
JT24144	Signal PWB Assy, (includes Terminal and DVI PWB)
JT24164	Power PWB
JT24174	Control PWB
UX22203D*	Optical Engine Assy, (includes Drive and FC4 PWB)
X480265	Audio PWB, (includes Main and Sub PWB)
UE22344	LC37-F Chassis

60VX500 (same as 60V500A except screen/cabinet)

HA01231	Lamp Power Unit
UX21511	Lamp Assy
JT24144	Signal PWB Assy, (includes Terminal and DVI PWB)
JT24164	Power PWB
JT24174	Control PWB
UX22203D*	Optical Engine Assy, (includes Drive and FC4 PWB)
X480265	Audio PWB, (includes Main and Sub PWB)
UE22344	LC37-F Chassis

* suffix 'D' added to indicate Dud Fee is now included

EXPLODED VIEW

50V500/50V500A/50VX500 Drawing 1

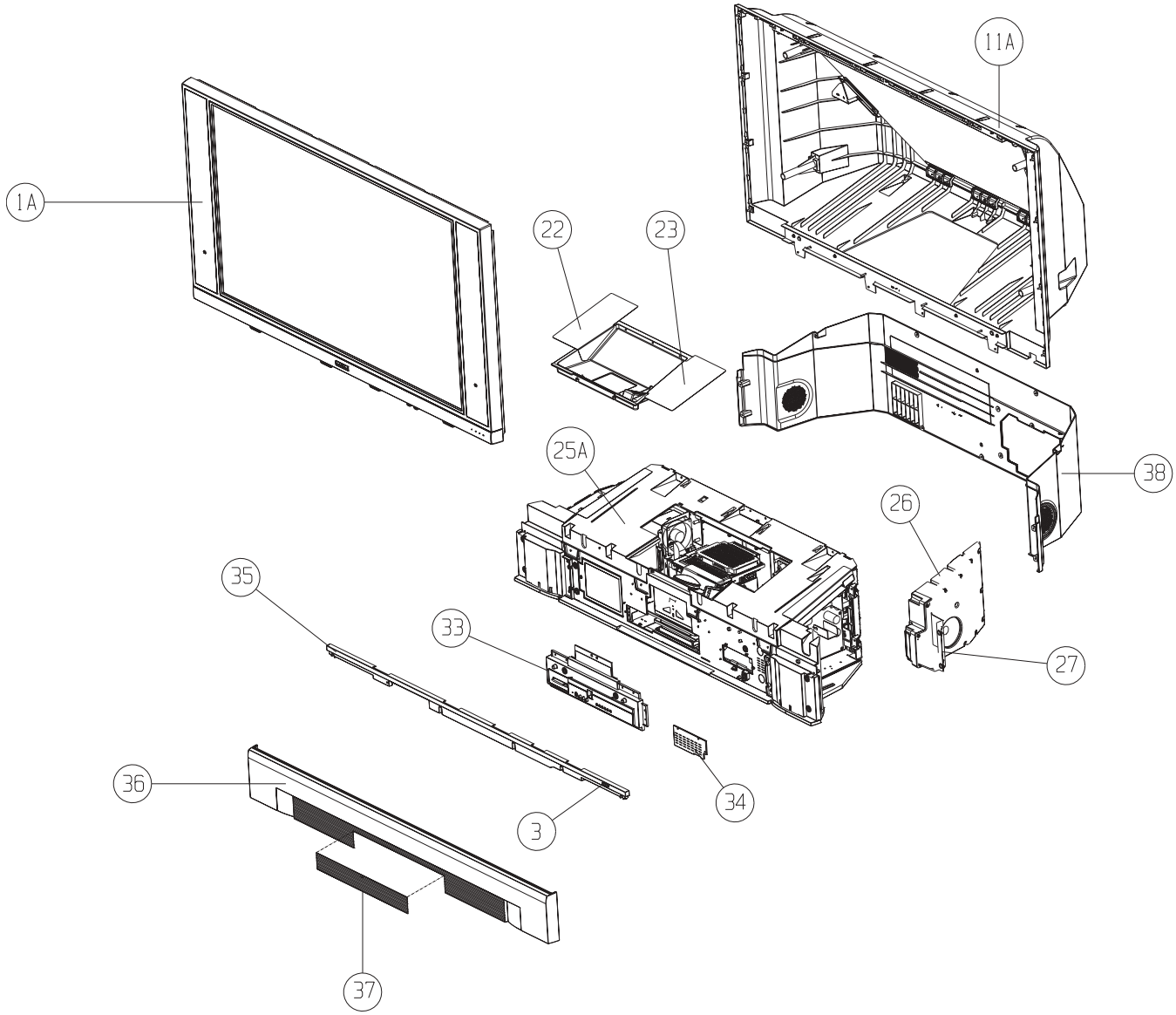

NOTES: Some parts may appear different than those shown in the exploded view. When ordering, refer to the replacement parts list for the correct part number. The circled numbers correspond to the parts list shown on page 7.

EXPLODED VIEW

50V500/50V500A/50VX500 Drawing 2

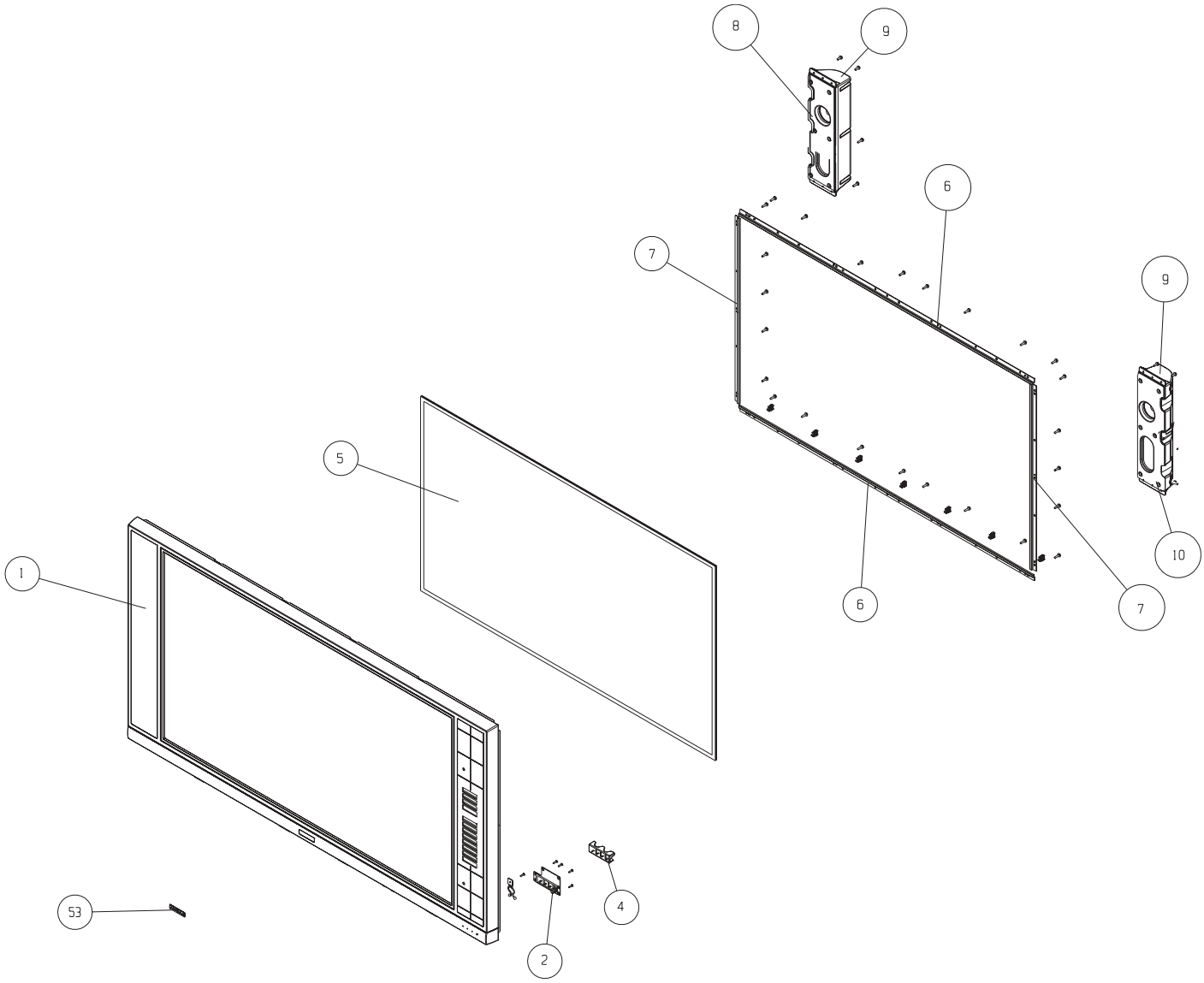

NOTES: Some parts may appear different than those shown in the exploded view. When ordering, refer to the replacement parts list for the correct part number. The circled numbers correspond to the parts list shown on page 7.

EXPLODED VIEW

50V500/50V500A/50VX500 Drawing 3

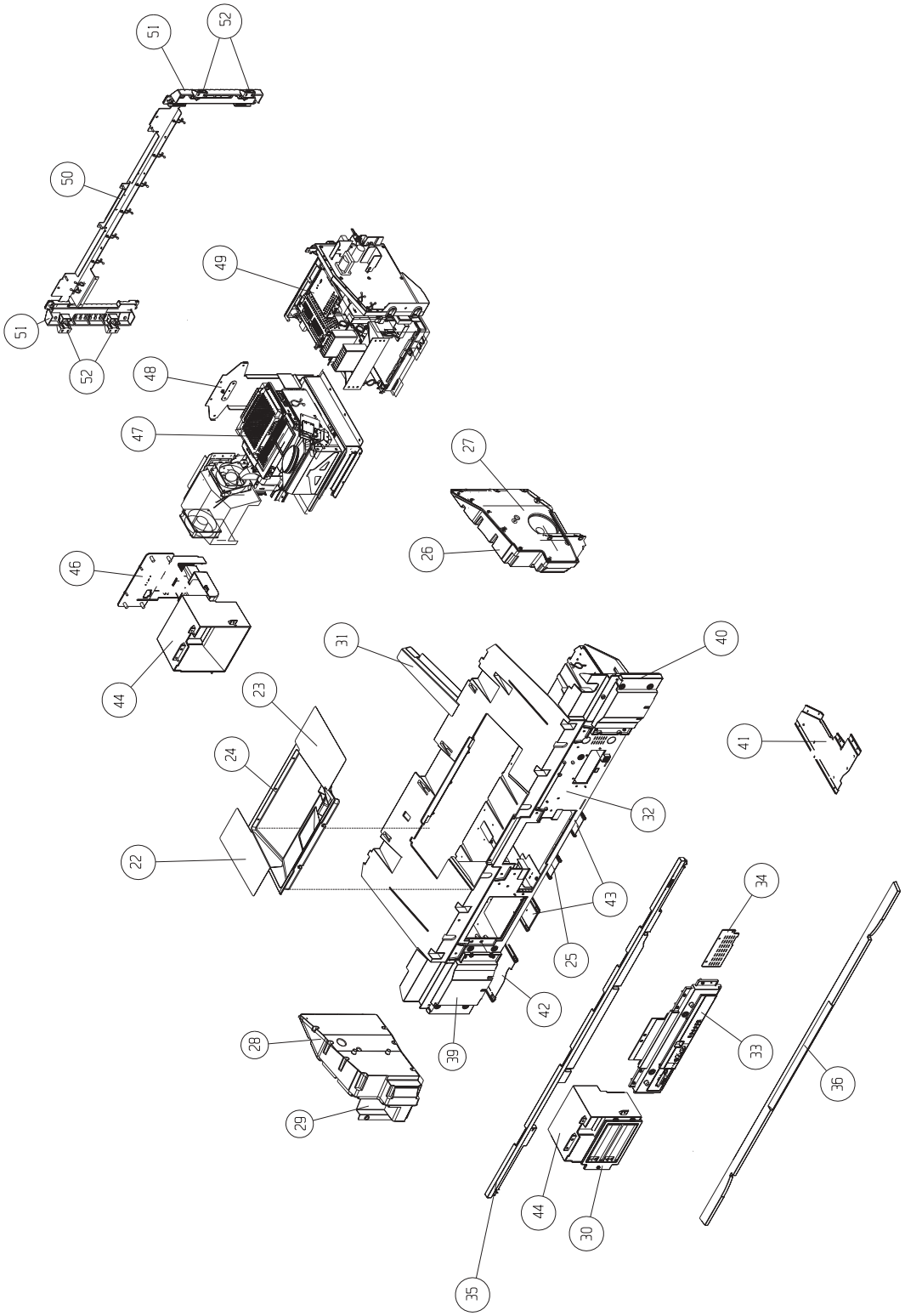

NOTES: Some parts may appear different than those shown in the exploded view. When ordering, refer to the replacement parts list for the correct part number. The circled numbers correspond to the parts list shown on page 7.

EXPLODED VIEW

50V500/50V500A/50VX500 Drawing 4

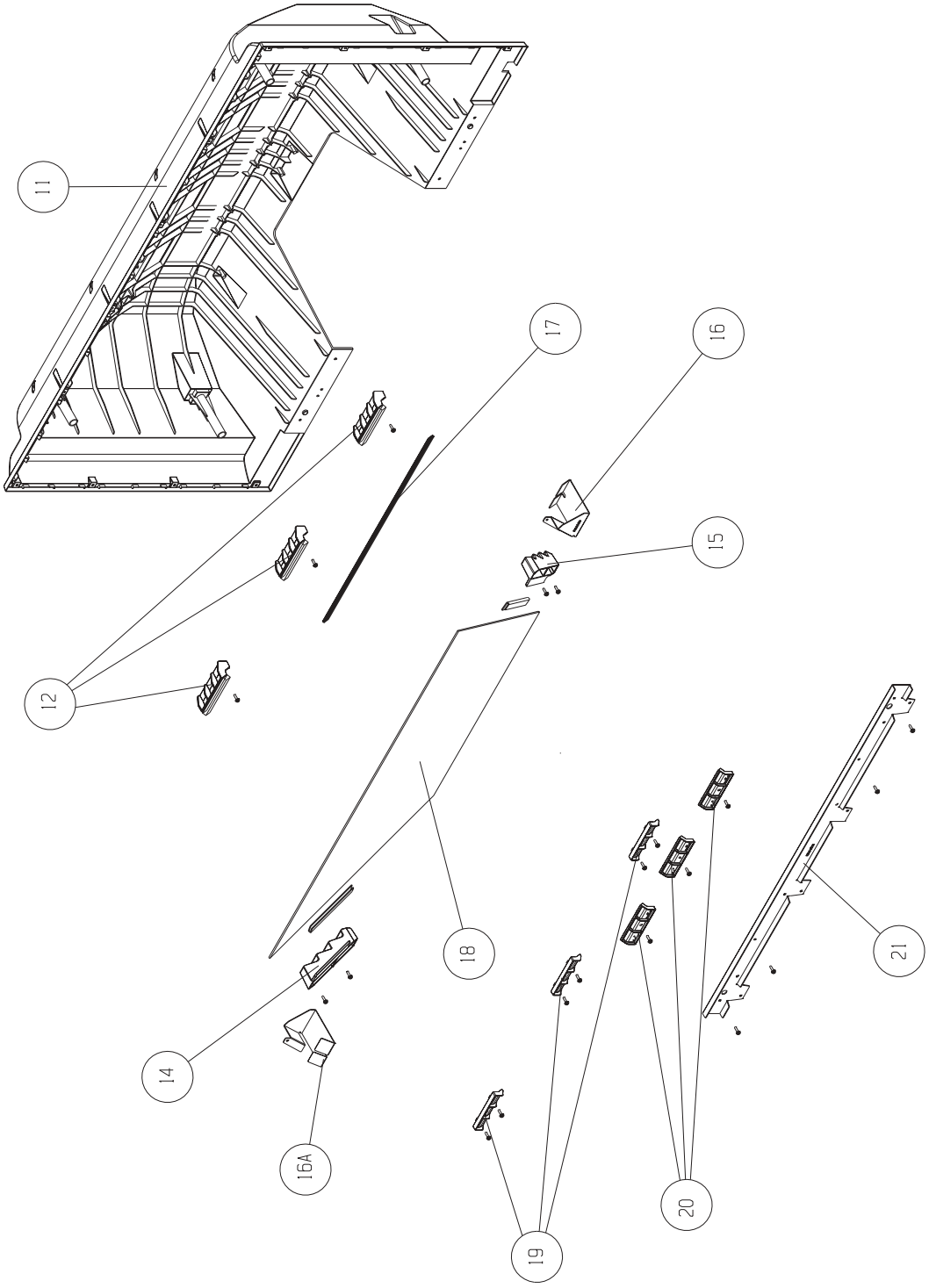

NOTES: Some parts may appear different than those shown in the exploded view. When ordering, refer to the replacement parts list for the correct part number. The circled numbers correspond to the parts list shown on page 7.

50" EXPLODED VIEW PARTS LIST

No	50V500 PART No	50V500A PART No	50VX500 PART No	DESCRIPTION	QTY
1A	NT03101	NT03103	NT03105	50V500 FRAME ASSY	1
1	QD36131	QD36131	QD36132	SCREEN FRAME 50V500	1
2	JT24171	JT24171	JT24171	CONTROL PWB ASSY	1
3	PC05731	PC05731	PC05731	POWER BUTTON V500	1
4	KQ03291	KQ03291	KQ03291	LED LENS V500	1
5	**KR03131**	**KR03131**	**KR03132**	50V SCREEN ASSY	1
6	NA66781	NA66781	NA66783	SCR FIX MTL H 50V500	2
7	NA66791	NA66791	NA66793	SCR FIX MTL V 50V500	2
8	NJ08042	NJ08042	NJ08042	SP BAFFLE L V500	1
9	NJ08051	NJ08051	NJ08051	SP BOX COVER V500	2
10	NJ08041	NJ08041	NJ08041	SP BAFFLE R V500	1
11A	KS06401	KS06403	KS06401	50V500 MIRROR COVER ASSY	1
11	QD36141	QD36141	QD36141	MIRROR COVER 50V500	1
12	NJ07801	NJ07801	NJ07801	MIRROR FIX PART UP 50V500	3
14	NJ07822	NJ07822	NJ07822	MIRROR FIX PART L 50V500	1
15	NJ07821	NJ07821	NJ07821	MIRROR FIX PART R 50V500	1
16A	NA69012	NA69012	NA69012	V500 MIRR SIDE MTL L	1
16	NA69011	NA69011	NA69011	V500 MIRR SIDE MTL R	1
17	MN06151	MN06151	MN06151	V500 MIRR LOW SPACER	1
18	KS06581	KS06581	KS06581	1ST MIRROR 50V500	1
19	NJ07831	NJ07831	NJ07831	MIRROR FIX PART UP B 50V500	3
20	NJ07811	NJ07811	NJ07811	MIRROR FIX PART LOW 50V500	3
21	NA64502	NA64502	NA64502	MIRR FIX LO MTL 50V	1
22	MN05841	MN05841	MN05841	V500 BARRIER L	1
23	MN05831	MN05831	MN05831	V500 BARRIER R	1
24	ME03441	ME03442	ME03442	LOW UPPER COVER V500	1
25A	QD36001	QD36003	QD36005	50V LOW CABINET ASSY	1
25	NA66741	NA66741	NA66741	BTM RAIL FIX MTL C50	1
26	NJ08072	NJ08072	NJ08072	WOOFER BOX COV L V500	1
27	NJ08061	NJ08061	NJ08061	WOOFER BAFFLE R V500	1
28	NJ08071	NJ08071	NJ08071	WOOFER BOX COV R V500	1
29	NJ08062	NJ08062	NJ08062	WOOFER BAFFLE L V500	1
30	PH33033	PH33033	PH33033	LAMP COVER 50V	1
31	ME03592	ME03592	ME03592	V500 BARRIER SIDE R	1
32	QD36151	QD36153	QD36153	LOW CABINET 50V500	1
33	PH33161	PH33161	PH33161	CONTROL PANEL V500	1
34	PH33441	PH33441	PH33441	LO CABI COVER F V500	1
35	PH33041	PH33041	PH33041	FRONT TRIM 50V500	1
36	PH32981	PH32981	PH32982	FRONT COVER 50V500	1
36A	PH32971	PH32971	PH32972	BOTTOM RAIL 50V500	1
37	PH33173	PH33173	PH33174	CONTROL DOOR V500	1
39	NJ07852	NJ07852	NJ07852	LO CABI SIDE L 50V500	1
40	NJ07851	NJ07851	NJ07851	LO CABI SIDE R 50V500	1
41	NA66732	NA66732	NA66732	BTM SIDE FIX MTL L50	1
42	NA66731	NA66731	NA66731	BTM SIDE FIX MTL R50	1
43	NA64181	NA64181	NA64181	BTM RAIL FIX MTL 50V500	2
44	NJ08181	NJ08181	NJ08181	LAMP DUCT B LC3X	1
46	NJ08171	NJ08171	NJ08171	LAMP DUCT A LC3X	1
47	**UX22201D**	**UX22202D**	**UX22202D**	LC37 OPTICAL BLOCK ASSY	1
48	NA66774	NA66774	NA66774	LOW CABI METAL C V500	1
49	UE22341	UE22343	UE22341	LC37 CHASSIS BLOCK ASSY	1
50	NA66763	NA66763	NA66763	LOW CABI METAL B V500	1
51	NJ08261	NJ08261	NJ08261	V500 CABI BRACKET 2	2
52	NJ08271	NJ08271	NJ08271	V500 CABI BRACKET 3	4
53	PU00801	PU00801	PU00802	ULTRAVISION BADGE	1
38	**QD36551**	**QD36551**	**QD36551**	**Lower Rear Cover 50"**	

CH 3

EXPLODED VIEW

60VX500/60V500A Drawing 1

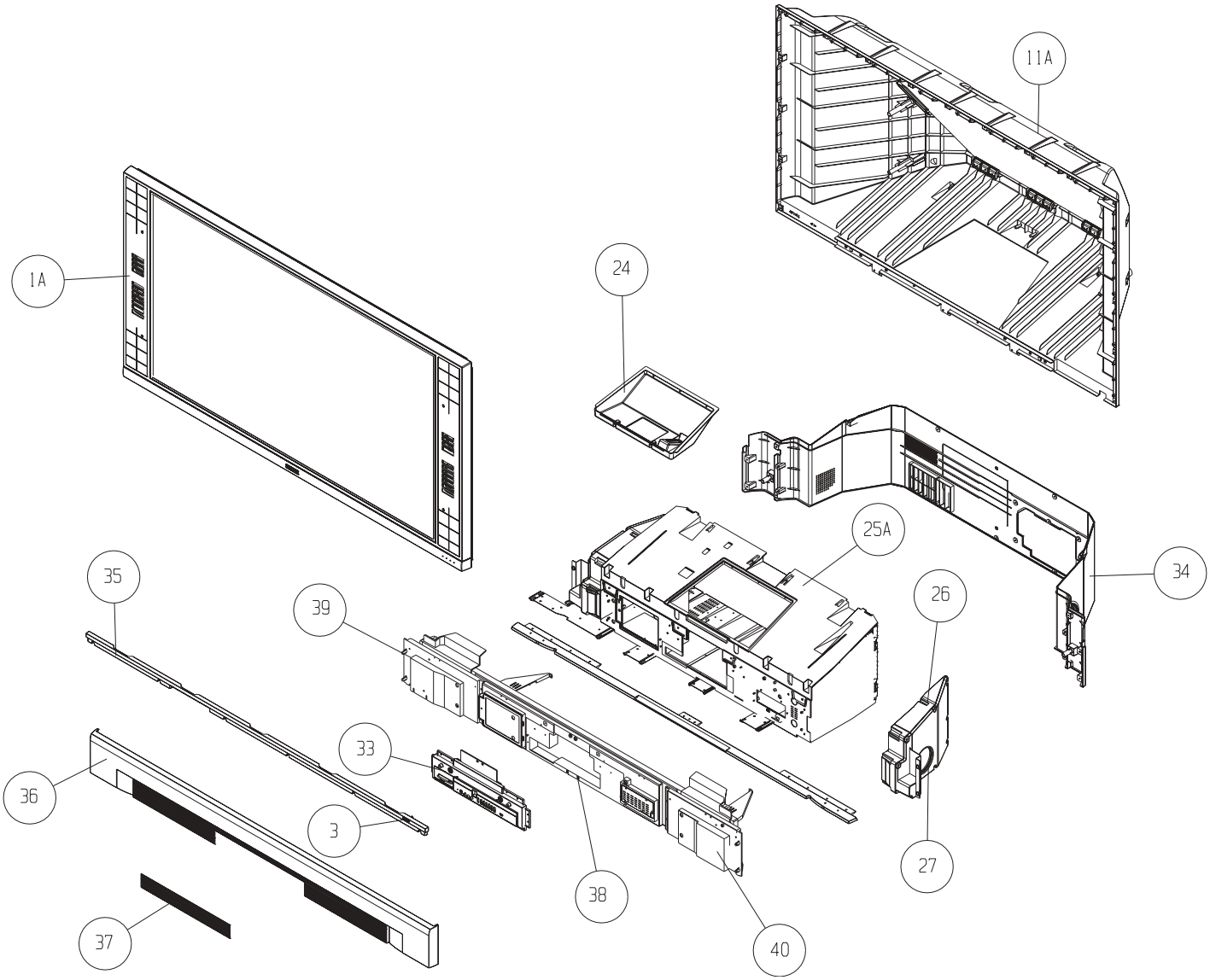

NOTES: Some parts may appear different than those shown in the exploded view. When ordering, refer to the replacement parts list for the correct part number. The circled numbers correspond to the parts list shown on page 12.

EXPLODED VIEW
60VX500/60V500A Drawing 2

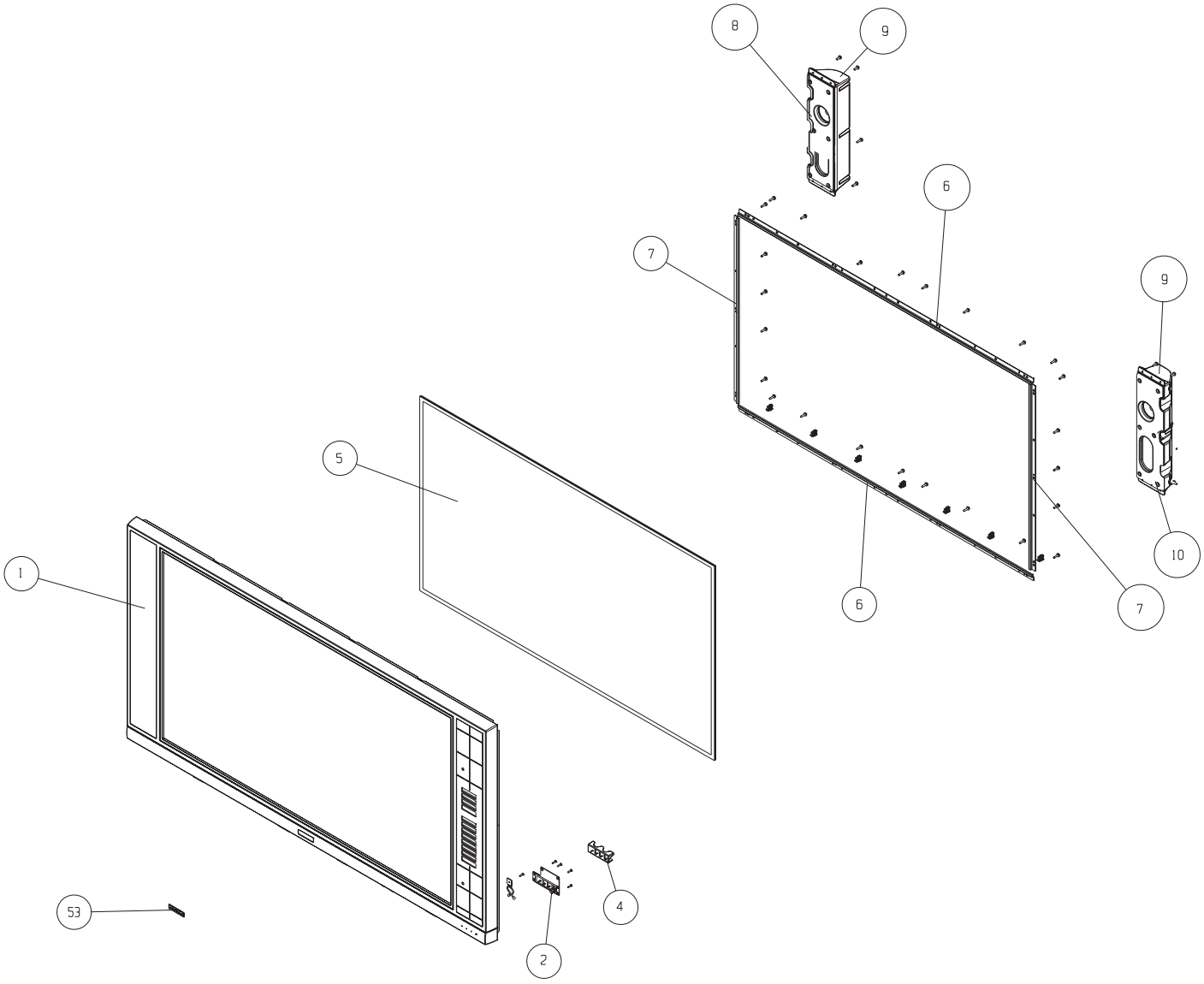

NOTES: Some parts may appear different than those shown in the exploded view. When ordering, refer to the replacement parts list for the correct part number. The circled numbers correspond to the parts list shown on page 12.

EXPLODED VIEW

60VX500/60V500A Drawing 3

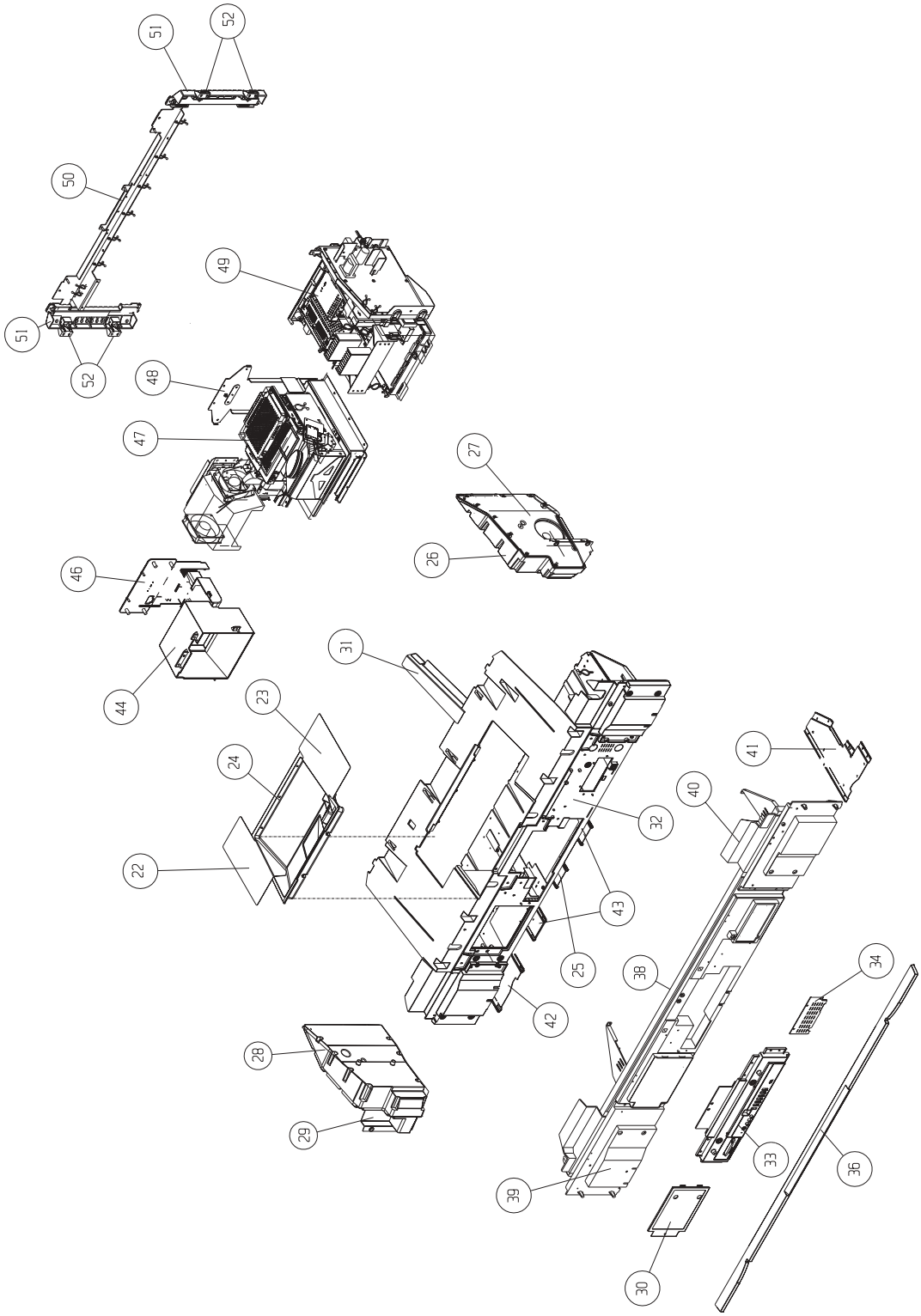

NOTES: Some parts may appear different than those shown in the exploded view. When ordering, refer to the replacement parts list for the correct part number. The circled numbers correspond to the parts list shown on page 12.

EXPLODED VIEW
60VX500/60V500A Drawing 4

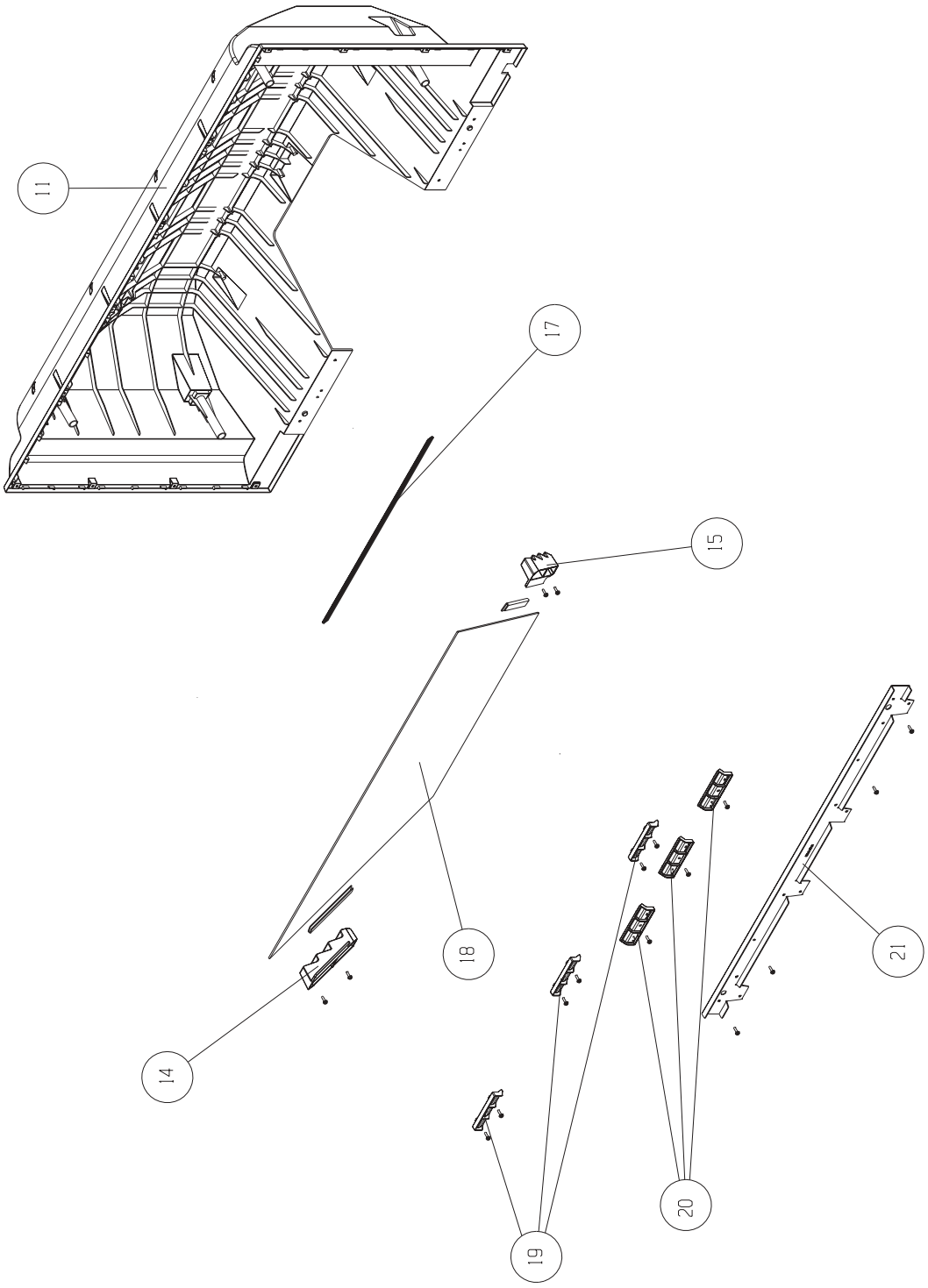

NOTES: Some parts may appear different than those shown in the exploded view. When ordering, refer to the replacement parts list for the correct part number. The circled numbers correspond to the parts list shown on page 12.

60" EXPLODED VIEW PARTS LIST

No	60V500A PART No	60VX500 PART No	DESCRIPTION	QTY
1A	NT03104	NT03106	60V500 FRAME ASSY	1
1	QD36511	QD36512	SCREEN FRAME 60V500	1
2	JT24171	JT24171	CONTROL PWB ASSY	1
3	PC05731	PC05731	POWER BUTTON V500	1
4	KQ03291	KQ03291	LED LENS V500	1
5	**KR02912**	KR02916	60V SCREEN ASSY	1
6	NA66782	NA66784	SCR FIX MTL H 60V500	2
7	NA66792	NA66794	SCR FIX MTL V 60V500	2
8	NJ08042	NJ08042	SP BAFFLE L V500	1
9	NJ08051	NJ08051	SP BOX COVER V500	2
10	NJ08041	NJ08041	SP BAFFLE R V500	1
11A	KS06404	KS06402	60V500 MIRROR COVER ASSY	1
11	QD36521	QD36521	MIRROR COVER 60V500	1
14	NJ07822	NJ07822	MIRROR FIX PART L 50V500	1
15	NJ07821	NJ07821	MIRROR FIX PART R 50V500	1
17	MN06152	MN06152	60V500 MIRR LOW SPACER	1
18	KS06582	KS06582	1ST MIRROR 60V500	1
19	NJ07831	NJ07831	MIRROR FIX PART UP B 50V500	3
20	NJ07811	NJ07811	MIRROR FIX PART LOW 50V500	3
21	NA67801	NA67801	BACK COVER BOTTOM METAL	1
22	MN05841	MN05841	V500 BARRIER L	1
23	MN05831	MN05831	V500 BARRIER R	1
24	ME03442	ME03442	LOW UPPER COVER V500	1
25A	QD36002	QD36002	60V LOW CABINET ASSY	1
25	NA68501	NA68501	BTM RAIL MTL C60	1
26	NJ08072	NJ08072	WOOFER BOX COV L V500	1
27	NJ08061	NJ08061	WOOFER BAFFLE R V500	1
28	NJ08071	NJ08071	WOOFER BOX COV R V500	1
29	NJ08062	NJ08062	WOOFER BAFFLE L V500	1
30	PH33032	PH33032	LAMP COVER	1
31	ME03592	ME03592	V500 BARRIER SIDE R	1
32	QD36153	QD36153	LOW CABINET 50V500	1
33	PH33162	PH33162	CONTROL PANEL 60V	1
34	**QD36531**	**QD36531**	**Lower Rear Cover 60"**	1
35	PH33311	PH33311	FRONT TRIM 50V500	1
36	PH33301	PH33302	FRONT COVER 50V500	1
36A	PH33291	PH33292	BOTTOM RAIL 60V500	1
37	PH33173	PH33174	CONTROL DOOR V500	1
38	PH33551	PH33551	FRONT SPACER BOX 60V	
39	NJ08001	NJ08001	LO CABI SIDE L 60V500	1
40	NJ08002	NJ08002	LO CABI SIDE R 60V500	1
41	NA68512	NA68512	BTM SIDE FIX MTL R60	1
42	NA68511	NA68511	BTM SIDE FIX MTL L60	1
43	NA64191	NA64191	BTM RAIL MTL C60	2
44	NJ08181	NJ08181	LAMP DUCT B LC3X	1
46	NJ08171	NJ08171	LAMP DUCT A LC3X	1
47	**UX22203D**	**UX22203D**	60V500 OPTICAL BLOCK ASSY	1
48	NA66774	NA66774	LOW CABI METAL C V500	1
49	UE22344	UE22344	60V CHASSIS BLOCK ASSY	1
50	NA66763	NA66763	LOW CABI METAL B V500	1
51	NJ08261	NJ08261	V500 CABI BRACKET 2	2
52	NJ08271	NJ08271	V500 CABI BRACKET 3	4
53	PU00801	PU00802	ULTRAVISION BADGE	1

HITACHI

HITACHI

PA **No. 0178**

50V500/LC37
60V500A/LC37F

NTSC

LC37 Chassis
LC37F Chassis

R/C: CLU-5729TSI

TO GO TO A CHAPTER, CLICK ON ITS HEADING BELOW

SAFETY PRECAUTIONS 2
PRODUCT SAFETY NOTICE 3
SERVICING PRECAUTIONS 4
AGENCY REGULATORY INFORMATION 8
TABLE OF CONTENTS 9
SPECIFICATIONS 11
FEATURES AND FUNCTIONS 22
PWB ADJUSTMENTS 49
TROUBLESHOOTING FLOW CHARTS 95
DC VOLTAGE 96
WAVEFORMS 108
REPLACEMENT PARTS LIST ....114 **Updated 08/05/05**
EXPLODED VIEW ....138 **Updated 07/12/05**
PRINTED CIRCUIT BOARDS 148
CONNECTION DIAGRAM 160
BLOCK DIAGRAM 161
BASIC CIRCUIT SCHEMATIC DIAGRAM 162
FINAL WIRING DIAGRAM 175
MAJOR ICS & UNITS ....179 **Updated 07/12/05**
OPTICAL ENGINE REMOVAL PROCEDURE 181

NOTE: This product is to be serviced at board level.

CAUTION: Before servicing this chassis, it is important that the service technician read the "Product Safety Notices" in this service manual.

SAFETY NOTICE

USE ISOLATION TRANSFORMER WHEN SERVICING

Components having special safety characteristics are identified by a ⚠ on the parts list in this Service Data and its supplements and bulletins. Before servicing the chassis, it is important that the service technician read and follow the "Safety Precautions" and "Product Safety Notices" in this Service Manual.

SPECIFICATIONS AND PARTS ARE SUBJECT TO CHANGE FOR IMPROVEMENT

LCD REAR PROJECTION TELEVISION

JUNE 2003 **HHEA-MANUFACTURING DIVISION**

Version 0178.07

SAFETY PRECAUTIONS

NOTICE: Comply with all cautions and safety-related notes located on or inside the cabinet and on the chassis or optic unit.

WARNING: Since the chassis of this receiver is connected to one side of the AC power supply during operation, whenever the receiver is plugged in service should not be attempted by anyone unfamiliar with the precautions necessary when working on this type of receiver.

The following precautions should be observed:

1. Do not install, remove, or handle the optic unit in any manner unless shatterproof goggles are worn. People not so equipped should be kept away from the optic unit while handling.

2. When service is required, an isolation transformer should be inserted between power line and the receiver before any service is performed on a “HOT” chassis receiver.

3. When replacing a chassis in the receiver, all the protective devices must be put back in place, such as barriers, nonmetallic knobs, adjustment and compartment cover-shields, isolation resistors, capacitors, etc.

4. When service is required, observe the original lead dress.

5. Always use the manufacturer’s replacement components. Critical components as indicated on the circuit diagram should not be replaced by another manufacturer’s. Furthermore, where a short circuit has occurred, replace those components that indicate evidence of overheating.

6. Before returning a serviced receiver to the customer, the service technician must thoroughly test the unit to be certain that it is completely safe to operate without danger of electrical shock, and be sure that no protective device built into the receiver by the manufacturer has become defective, or inadvertently defeated during servicing.

Therefore, the following checks should be performed for the continued protection of the customer and service technician.

Leakage Current Cold Check

With the AC plug removed from the 120V AC 60Hz source, place a jumper across the two plug prongs. Using an insulation tester (DC500V), connect one lead to the jumpered AC plug and touch the other lead to each exposed metal part (antennas, screwheads, metal overlays, control shafts, etc.), particularly any exposed metal part having a return path to the chassis should have a minimum resistor reading of 2.4MΩ and a maximum resistor reading of 5.2MΩ. Any resistance value below or above this range indicates an abnormality which requires corrective action. An exposed metal part having a return path to the chassis will indicate an open circuit.

Leakage Current Hot Check

Plug the AC line cord directly into a 120V AC 60Hz outlet (do not use an isolated transformer for this check). Turn the AC power ON. Using a Leakage Current Tester (Simpson’s Model 228 or equivalent), measure for current from all exposed metal parts of the cabinet (antennas, screwheads, overlays, control shafts, etc.) particularly any exposed metal part having a return path to the chassis or to a known earth ground (water pipe, conduit, etc.). Any current measured must not exceed 0.5 MIU.

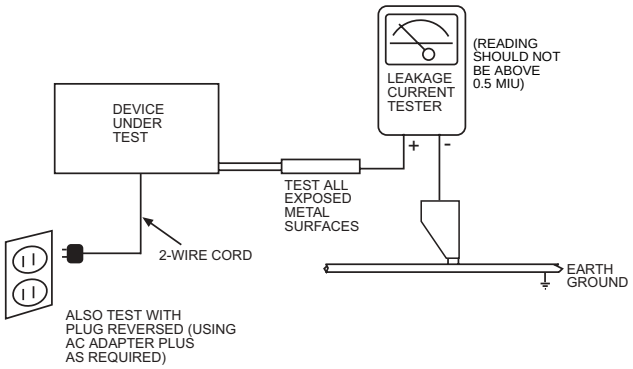

AC LEAKAGE TEST

ANY MEASUREMENTS NOT WITHIN THE LIMITS OUTLINED ABOVE ARE INDICATIVE OF A POTENTIAL SHOCK HAZARD AND MUST BE CORRECTED BEFORE RETURNING THE RECEIVER TO THE CUSTOMER.

PRODUCT SAFETY NOTICE

Many electrical and mechanical parts in HITACHI television receivers have special safety-related characteristics. These are often not evident from visual inspection nor can the protection afforded by them necessarily be obtained by using replacement components rated for higher voltage, wattage, etc. Replacement parts which have these special safety characteristics are identified in this Service Manual.

Electrical components having such features are identified with an ⚠ mark in the schematics and parts list in this Service Manual.

The use of a substitute replacement component which does not have the same safety characteristics as the HITACHI-recommended replacement component, shown in the parts list in this Service Manual, may create shock, fire, or other hazards.

Production safety is continuously under review and new instructions are issued from time to time. For the latest information, always consult the current HITACHI Service Manual. A subscription to, or additional copies of HITACHI Service Manuals may be obtained at a nominal charge from HITACHI Sales Corporation.

Ultraviolet Radiation

OPTIC UNIT: The primary source of Ultraviolet Radiation in this receiver is the optic unit. The optic unit utilized in this chassis is specially constructed to limit Ultraviolet Radiation emissions. For continued Ultraviolet Radiation protection, the replacement optic unit must be the same type as the original HITACHI-approved type.

Service Personnel - WARNING
Eye damage may result from directly viewing the light produced by the lamp used in this product. Always turn off lamp before opening optic unit. Ultraviolet radiation eye protection required during servicing.

When troubleshooting and making test measurements in a receiver with an excessive high voltage problem, avoid being unnecessarily close to the optic unit and the high voltage component.

Do not operate the chassis longer than is necessary to locate the cause of excessive voltage.

This Service Manual is intended for qualified service technicians; it is not meant for the casual do-it-yourselfer. Qualified technicians have the necessary test equipment and tools, and have been trained to properly and safely repair complex products such as those covered by this manual. Improperly performed repairs can adversely affect the safety and reliability of the product and may void warranty. Consumers should not risk trying to do the necessary repairs and should refer to a qualified service technician.

WARNING
Lead in solder used in this product is listed by the California Health and Welfare agency as a known reproductive toxicant which may cause birth defects or other reproductive harm (California Health and Safety Code, Section 25249.5).

When servicing or handling circuit boards and other components which contain lead in solder, avoid unprotected skin contact with solder. Also, when soldering do not inhale any smoke or fumes produced.

SAFETY NOTICE
USE ISOLATION TRANSFORMER
WHEN SERVICING

Components having special safety characteristics identified by ⚠ on the parts list in this service manual and its supplements and bulletins. Before servicing this product, it is important that the service technician read and follow the “Safety Precautions” and the “Product Safety Notices” in this Service Manual.

For continued ultraviolet protection, replace optic unit with original type or HITACHI equivalent type.

POWER SOURCE

This television receiver is designed to operate on 120 Volts/60Hz, AC house current. Insert the power cord into a 120 Volts/60Hz outlet.

NEVER CONNECT THE TV TO OTHER THAN THE SPECIFIED VOLTAGE OR TO DIRECT CURRENT.

CAUTION!
The following symbol near the fuse indicates fast operating fuse (to be replaced). Fuse ratings appear within the symbol.

Example:

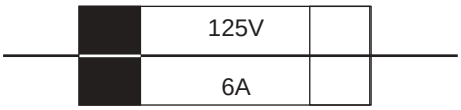

F901

The rating of fuse F901 is 6.0A-125V.
Replace with the same type of fuse for continued protection against fire.

NOTE: The lamp in this product contains Mercury. Dispose of properly in accordance with applicable environmental laws. For Recycling and Disposal information, contact your respective governmental agencies or the Electronic Industries Alliance at www.eiae.org (in the U.S.) or Electronic Product Stewardship Canada at www.epsc.ca (in Canada).

SERVICING PRECAUTIONS

CAUTION: Before servicing instruments covered by this service data and its supplements and addenda, read and follow the SAFETY PRECAUTIONS on page 2 of this publication.
NOTE: If unforseen circumstances create conflict between the following SERVICING PRECAUTIONS and any of the SAFETY PRECAUTIONS on page 2 of this publication, always follow the SAFETY PRECAUTIONS.
Remember: Safety First.

General Servicing Guidelines

1. Always unplug the instrument AC power cord from the AC power source before:
   a. Removing or reinstalling any component, circuit board, module, or any other instrument assembly.
   b. Disconnecting or reconnecting any instrument electrical plug or other electrical connection.
   c. Connecting a test substitute in parallel with an electrolytic capacitor in the instrument.
      CAUTION: A wrong part substitution or incorrect polarity installation of electrolytic capacitors may result in an explosion hazard.
2. Do not spray chemicals on or near this instrument or any of its assemblies.
3. Unless specified otherwise in these service data, clean electrical contacts by applying the following mixture to the contacts with a pipe cleaner, cotton-tipped stick or comparable nonabrasive applicator: 10% (by volume) Acetone and 90% (by volume) ispropyle alchohol (90%-99% strength).
   CAUTION: This is a flammable mixture. Unless specified otherwise in these service data, lubrication of contacts is not required.
4. Do not defeat any plug/socket B+ voltage interlocks with which instruments covered by this service data might be equipped.
5. Do not apply AC power to this instrument and/or any of its electrical assemblies unless all solid-state device heat-sinks are correctly installed.
6. Always connect the test instrument ground lead to the appropriate instrument chassis ground before connecting the test instrument positive lead. Always remove the test instrument ground lead last.
7. Use with this instrument only the test fixtures specified in this service data.
   CAUTION: Do not connect the test fixture ground strap to any heatsink in this instrument.

Electrostatically Sensitive (ES) Devices

Some semiconductor (solid state) devices can be damaged easily by static electricity. Such components commonly are called Electrostatically Sensitive (ES) Devices. Examples of typical ES devices are integrated circuits and some field-effect transistors and semiconductor “chip” components. The following techniques should be used to help reduce the incidence of component damage caused by static electricity.

1. Immediately before handling any semiconductor component or semiconductor-equipped assembly, drain off any electrostatic charge on your body by touching a known earth ground. Alternatively, obtain and wear a commercially available discharging wrist strap device, which should be removed for potential shock reasons prior to applying power to the unit under test.
2. After removing an electrical assembly equipped with ES devices, place the assembly on a conductive surface such as aluminum foil, to prevent electrostatic charge build-up or exposure of the assembly.
3. Use only a grounded-tip soldering iron to solder or desolder ES devices.
4. Use only an anti-static type solder removal device. Some solder removal devices not classified as “anti-static” can generate electrical charges sufficient to damage ES device.
5. Do not use freon-propelled chemicals. These can generate electrical charges sufficient to damage ES devices.
6. Do not remove a replacement ES device from its protective package until immediately before you are ready to install it. (Most replacement ES devices are packaged with leads electrically shorted together by conductive foam, aluminum foil or comparable conductive material.)
7. Immediately before removing the protective material from the leads of a replacement ES device, touch the protective material to the chassis or circuit assembly into which the device will be installed.
   CAUTION: Be sure no power is applied to the chassis or circuit, and observe all other safety precautions.
8. Minimize bodily motions when handling unpackaged replacement ES devices. (Otherwise harmless motion such as the brushing together of your clothes fabric or the lifting of your foot from a carpeted floor can generate static electricity sufficient to damage an ES device.)

General Soldering Guidelines

1. Use a grounded-tip, low-wattage soldering iron and appropriate tip size and shape that will maintain tip temperature within the range 500°F to 600°F.

2. Use an appropriate gauge of resin-core solder composed of 60 parts tin/40 parts lead.

3. Keep the soldering iron tip clean and well-tinned.

4. Thoroughly clean the surfaces to be soldered. Use a small wire-bristle (0.5 inch or 1.25 cm) brush with a metal handle. Do not use freon-propelled spray-on cleaners.

5. Use the following desoldering technique.
   a. Allow the soldering iron tip to reach normal temperature (500°F to 600°F).

   b. Heat the component lead until the solder melts. Quickly draw away the melted solder with an anti-static, suction-type solder removal device or with solder braid.
   CAUTION: Work quickly to avoid overheating the circuit board printed foil.

6. Use the following soldering technique.
   a. Allow the sodering iron tip to reach normal temperature (500°F to 600°F).

   b. First, hold the soldering iron tip and solder strand against the component lead until the solder melts.

   c. Quickly move the soldering iron tip to the junction of the component lead and the printed circuit foil, and hold it there only until the solder flows onto and around both the component lead and the foil.
   CAUTION: Work quickly to avoid overheating the circuit board printed foil or components.

   d. Closely inspect the solder area and remove any excess or splashed solder with a small wire-bristle brush.

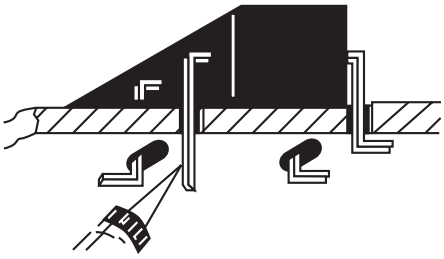

Use Soldering Iron to Pry Leads

IC Removal/Replacement

Some Hitachi unitized chassis circuit boards have slotted holes (oblong) through which the IC leads are inserted and then bent flat against the circuit foil. When holes are the slotted type, the following technique should be used to remove and replace the IC. When working with boards using the familiar round hole, use the standard technique as outlined in paragraphs 5 and 6 above.

Removal

1. Desolder and straighten each IC lead in one operation by gently prying up on the lead with the soldering iron tip as the solder melts.

2. Draw away the melted solder with an anti-static suction-type sol der removal device (or with solder braid) before removing the IC.

Replacement

1. Carefully insert the replacement IC in the circuit board.

2. Carefully bend each IC lead against the circuit foil pad and solder it.

3. Clean the soldered areas with a small wire-bristle brush. (It is not necessary to reapply acrylic coating to areas.)

“Small-signal” Discrete Transistor Removal/Replacement

1. Remove the defective transistor by clipping its leads as close as possible to the component body.

2. Bend into a “U” shape the end of each of three leads remaining on the circuit board.

3. Bend into a “U” shape the replacement transistor leads.

4. Connect to replacement transistor leads to the corresponding leads extending from the circuit board and crimp the “U” with long nose pliers to insure metal to metal contact, then solder each connection.

Power Output Transistor Devices Removal/Replacement

1. Heat and remove all solder from around the transistor leads.

2. Remove the heatsink mounting screw (if so equipped).

3. Carefully remove the transistor from the circuit board.

4. Insert new transistor in circuit board.

5. Solder each transistor lead, and clip off excess lead.

6. Replace heatsink.

Diode Removal/Replacement

1. Remove defective diode by clipping its leads as close as possilbe to diode body.

2. Bend the two remaining leads perpendicularly to the circuit board.

3. Observing diode polarity, wrap each lead of the new diode around the corresponding lead on the circuit board.

4. Securely crimp each connection and solder it.

5. Inspect (on the circuit board copper side) the solder joints of the two “original leads”. If they are not shiny, reheat them and, if necessary, apply additional solder.

Fuses and conventional Resistor Removal/Replacement

1. Clip each fuse or resistor lead at top of circuit board hollow stake.

2. Securely crimp leads of replacement component around stake 1/8 inch from top.

3. Solder the connections.
   CAUTION: Maintain original spacing between the replaced component and adjacent components and the circuit board, to prevent excessive component temperatures.

Circuit Board Foil Repair

Excessive heat applied to the copper foil of any printed circuit board will weaken the adhesive that bonds the foil to the circuit board, causing the foil to separate from, or "lift-off" the board. The following guidelines and procedures should be followed whenever this condition is encountered.

In Critical Copper Pattern Areas

High component/copper pattern density and/or special voltage/current characteristics make the spacing and integrity of copper pattern in some circuit board areas more critical than in others. The circuit foil in these area is designated as Critical Copper Pattern. Because Critical Copper Pattern requires special soldering techniques to ensure the maintenance of reliability and safety standards, contact your Hitachi personnel.

At IC Connections

To repair defective copper pattern at IC connections, use the following procedure to install a jumper wire on the copper pattern side of the circuit board. (Use this technique only on IC connections.)

1. Carefully remove the damaged copper pattern with a sharp knife. (Remove only as much copper as absolutely necessary.)

2. Carefully scratch away the solder resist and acrylic coating (if used) from the end of the remaining copper pattern.

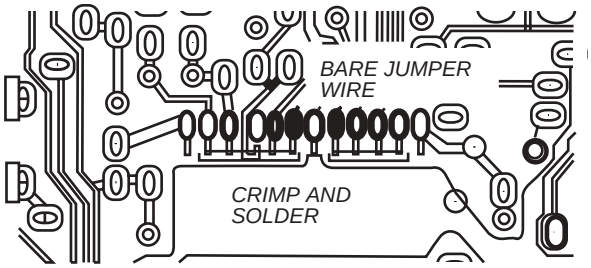

Install Jumper Wire and Solder

3. Bend a small "U" in one end of a small-gauge jumper wire and carefully crimp it around the IC pin. Solder the IC connection.

4. Route the jumper wire along the path of the cut-away copper pattern and let it overlap the previously scraped end of the good copper pattern. Solder the overlapped area, and clip off any excess jumper wire.

At Other Connections

Use the following technique to repair defective copper pattern at

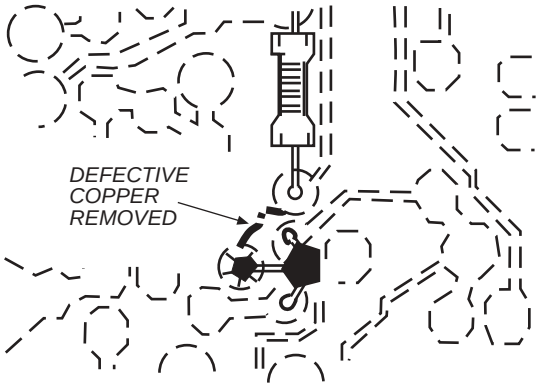

Insulated Jumper Wire

connections other than IC Pins. This technique involves the installation of a jumper wire on the component side of the circuit board.

1. Remove the defective copper pattern with a sharp knife. Remove at least 1/4 inch of copper, to ensure hazardous condition will not exist if the jumper wire opens.

2. Trace along the copper pattern from both wire sides of the pattern break and locate the nearest component directly connected to the affected copper pattern.

3. Connect insulated 20-gauge jumper wire from the nearest component on one side of the pattern break to the lead of the nearest component on the other side. Carefully crimp and solder the connections.
   CAUTION: Be sure the insulated jumper wire is dressed so that it does not touch components or sharp edges.

Frequency Synthesis (FS) Tuning Systems

1. Always unplug the instrument AC power cord before disconnecting or reconnecting FS tuning system cables and before removing or inserting FS tuning system modules.

2. The FS tuner must never be disconnected from the FS tuning control module while the power is applied to the instrument.

3. When troubleshooting intermittent problems that might be caused by defective cable connection(s) to the FS tuning system, remove the instrument AC power as soon as the defective connector is found and finish confirming the bad connection with a continuity test. This procedure will reduce the probability of electrical overstress of the FS system semi-conductor components.

NOTE: ***These components are affixed with glue. Be careful not to break or damage any foil under the component or at the pins of the ICs when removing. Usually applying heat to the component for a short time while twisting with tweezers will break the component loose.***

Leadless Chip Components (surface mount)

Chip components must be replaced with identical chips due to critical foil track spacing. There are no holes in the board to mount standard transistors or diodes. Some chip capacitor or resistor board solder pads may have holes through the board, however the hole diameter limits standard resistor replacement to 1/8 watt. Standard capacitors may also be limited for the same reason. It is recommended that identical chip components be used. .

Chip resistors have a three digit numerical resistance code -1st and 2nd significant digits and a multiplier. Example: 162 = 1600 or 1.6KΩ resistor, 0 = 0Ω (jumper).

Chip capacitors generally do not have the value indicated on the capacitor. The color of the component indicates the general range of the capacitance.

Chip transistors are identified by a two letter code. The first letter indicates the type and the second letter, the grade of transistor.

Chip diodes have a two letter identification code as per the code chart and are a dual diode pack with either common anode or common cathode. Check the parts list for correct diode number.

Component Removal

1. Use solder wick to remove solder from component end caps or terminals.
2. Without pulling up, carefully twist the component with tweezers to break the adhesive.
3. Do not reuse removed leadless or chip components since they are subject to stress fracture during removal.

Chip Component Installation

1. Put a small amount of solder on the board soldering pads.
2. Hold the chip component against the soldering pads with tweezers or with a miniature alligator clip and apply heat to the pad area with a 30 watt iron until solder flows. Do not apply heat for more than 3 seconds

Chip Components

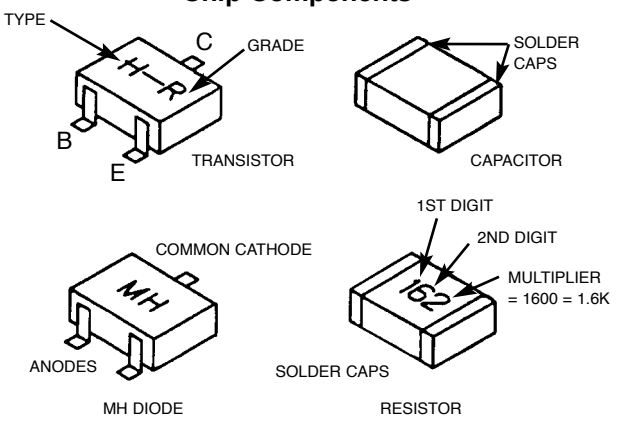

How to Replace Flat-IC —Required Tools—

- Soldering iron
- iron wire or small awl
- De-solder braids
- Magnifier

1. Remove the solder from all of the pins of a Flat-IC by using a de-solder braid.

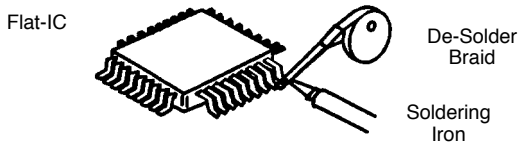

2. Put the iron wire under the pins of the Flat-IC and pull it in the direction indicated while heating the pins using a soldering iron. A small awl can be used instead of the iron wire.

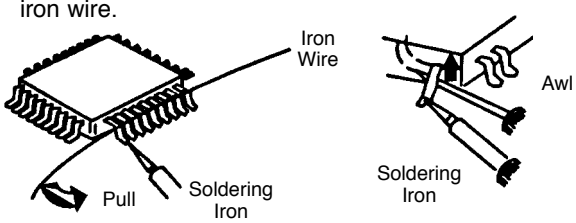

3. Remove the solder from all of the pads of the Flat-IC by using a de-solder braid.

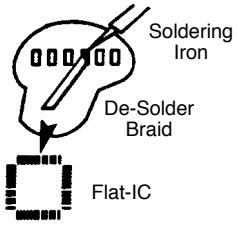

4. Position the new Flat-IC in place (apply the pins of the Flat-IC to the soldering pads where the pins need to be soldered). Properly determine the positions of the soldering pads and pins by correctly aligning the polarity symbol.

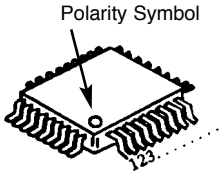

5. Solder all pins to the soldering pads using a fine tipped soldering iron.

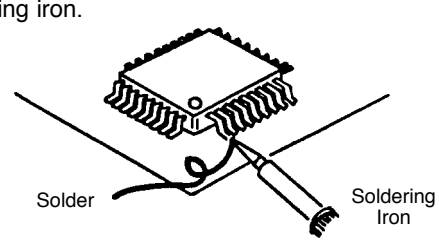

6. Check with a magnifier for solder bridge between the pins or for dry joint between pins and soldering pads. To remove a solder bridge, use a de-solder braid as shown in the figure below.

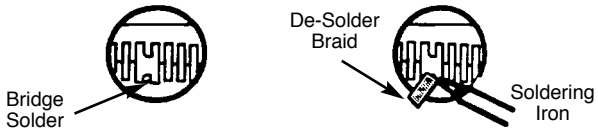

USEFUL INFO

AGENCY REGULATORY INFORMATION

Modifications

The FCC requires the user to be notified that any changes or modifications made to this device that are not expressly approved by Hitachi Home Electronics (America), Inc. may void the user's warranty.

Cables

Any cables that are supplied with the system must be replaced with identical cables in order to assure compliance with FCC rules. Order Hitachi spares as replacement cables.

Declaration of Conformity

This device complies with Part 15 of the FCC Rules. Operation is subject to the following two conditions: (1) this device may not cause harmful interference and (2) this device must accept any interference received, including interference that may cause undesired operation.

Cable Compatible Television Apparatus- Tèlèvision câblocompatible, Canada.

Notes on Closed Caption:
This television receiver will display television closed captioning, (CC or), in accordance with paragraph 15.119 of the FCC rules.

For questions regarding this declaration, contact:
Hitachi America, LTD.
Home Electronics Division
900 Hitachi Way
Chula Vista, CA 91914
Tel. 1-800-448-2244 (1-800-HITACHI)
ATTN: CUSTOMER RELATIONS

TO GO TO AN ADJUSTMENT, CLICK ON ITS HEADING BELOW

TABLE OF CONTENTS

I. SPECIFICATIONS 11
1. Feature 11
2. Main Parts and A/V Terminals 12
3. White Balance 13
4. Performance Specifications 13
5. Terminals and Other Functions 14
5.1 Available signal Format and Frequency 14
5.2 Terminal Shape 14
5.3 DVI Specification 15
5.3.1 General Specification 15
5.3.2 DVI Connector Specification 15
6. Aspect Specification For Each Input Source 16
6.1 Aspect Mode 16
6.1.1 Aspect Mode: Off 16
6.1.2 Aspect Mode: On 17
6.1.3 Aspect Mode Resolution 18
6.1.4 Black Side Panel Operation 19
6.1.5 Vertical Position Operation 19
6.2 PIP Mode 20
6.2.1 PIP Available Mode 20
6.2.2 PIP Mode Resolution 21

II. FEATURES AND FUNCTIONS 22
1. Front Panel Controls 22
2. Rear Panel Jacks 25
3. Lamp Replacement 29
4. On-Screen-Display Features 33
4.1 Video Setting 34
4.2 Channel Manager 38
5. Connecting AV Network 40
5.1 AV Network Setup Wizard 41
5.2 AV Network Codes 42
5.3 How To Use AV Network 43
5.4 How To Use The Aspect Mode 48

III. ASSEMBLED P.W.B. ADJUSTMENT 49
1. Memory Initialization 49
Table 1. I²C Parameter List 61
Table 2. Factory Reset 88
2. Factory Reset 50
3. Raster Position Adjustment 51
3.1 Mechanical Raster Position Adjustment 51
3.1.1 Geometry Specifications 51
3.1.2 Adjustment Mechanism 52
3.1.3 Flow Chart For Adjustment 53
3.1.4 Adjustment Method 54
3.2 Electrical (I²C) Picture Position Adjustment 54
4. Display Area Specification 55
5. Amplitude Adjustment 56
5.1 RGB Amplitude Adjustment 56
6. Sub-Contrast Adjustment 56
7. Ghost Adjustment 57
8. V.COM (Flicker) Adjustment 57
9. NASH (Vertical Line) Adjustment 57
10. (Gamma) White Balance Adjustment 58
11. Color (White) Uniformity Adjustment 59
12. Door Protection Operation Check 60
13. Lamp Holder Protection Operation Check 60
14. High Temperature Protection Operation Check 60

IV. POWER P.W.B. 92
1. Power Supply 93
1.1 Ouput Voltage 93
1.2 Portection Circuit Blcok Diagram.....94

V. TROUBLE SHOOTING FLOWCHART 95

VI. DC VOLTAGE 96

VII. WAVEFORMS 108

VIII. REPLACEMENT PARTS LIST 114

IX. EXPLODED VIEW.....138

X. PRINTED CIRCUIT BOARD 148

XI. CONNECTION DIAGRAM 160

XII. BLOCK DIAGRAM 161

XIII. BASIC CIRCUIT DIAGRAM 162

XIV. FINAL WIRING 175

XV. MAJOR ICs and UNITS 179

I. SPECIFICATION

1.0 Features:

- Superfine Picture Quality
  1280 Line Horizontal Resolution
- Remote (Controls many VCR brands, cable boxes, satellite boxes, and other audio equipment.)
- New Easy-to-Use (3-Language) On-Screen Menu
- New AV Network Infra-Red (IR) System
  Control up to 4 components with one remote. (2 IR Mouse cables included.)
- Full Set of Input Jacks, including S-VIDEO
- COMPONENT VIDEO: Y-P_B/P_R
- Six Aspect Modes
- Closed Caption Decoder
- 2-Tuner Picture in Picture
- Dual Antenna Inputs
- Video Input Sensor
- 3 Dimensional Y/C Comb Filter
- Full 1080i HDTV capable.
- DVI with HDCP (High bandwidth Digital Content Protection V1.0 compatible).
- Photo MC (View digital still pictures from a memory card)
- BBE Technology.
- SRS Technology.

*SRS and the symbol are registered trademarks of SRS Labs, Inc. SRS technology is incorporated under license from SRS Labs, Inc.

*Licensed by BBE Sound, Inc. under USP4638258 and 4482866. BBE and BBE symbol are registered trademarks of BBE Sound, Inc. Manufactured under license from BBE Sound, Inc.

Inputs:

- Power Input . . . . . .AC 120V, 60Hz
- Stand-by Power 0.6W
- Power Consumption
  -Pmax 172W
  -Pave 158W
- Antenna input impedance . . . . . .75 Ohm
- Channel coverage . . . . . .181ch.
  VHF-Band . . . . . .2 ~ 13
  UHF-Band . . . . . .14 ~ 69
  CATV Mid Band . . . . . .A-5 ~ A-1
  . . . . . .A-I
  Super Band . . . . . .J-W
  Hyper Band . . . . . .W+1 - W+28
  Ultra Band . . . . . .W+29 - W+84
- Video . . . . . .1.0Vp-p, 75 Ohm
- S-Video
  Luminance (Y) . . . . . .1.0Vp-p, 75 Ohm
  Chrominance (C) . . . . . .0.286Vp-p, 75 Ohm
- Component Video
  Luminance (Y) . . . . . .1.0Vp-p, 75 Ohm
  Chrominance (P_B/P_R) . . . . . .0.7Vp-p, 75 Ohm
- Audio input Impedance . . . . . .47k Ohm
- Average input level 470mVrms
- DVI - HDTV . . . . . .DVI 25pin

Outputs:

- Video . . . . . .1.0Vp-p. 75 Ohm
- Audio (Fixed) . . . . . .470mVrms, 1k Ohm
- S-Video
  Luminance (Y) . . . . . .1.0Vp-p, 75 Ohm
  Chrominance (C) . . . . . .0.286Vp-p, 75 Ohm

Dimensions:

	50V500	60V500A
• Height (in.)	35 1/2	40 1/4
(mm)	901	1,025
• Width (in.)	54 5/8	63 3/8
(mm)	1,387	1,609
• Depth (in.)	16 3/8	20 1/2
(mm)	415	520
• Weight (lbs.)	119	139
(kg)	54.2	63

NOTE: Due to improvements, specifications in this service manual are subject to change without notice.

I. SPECIFICATION

2.0 MAIN PARTS AND A/V TERMINALS.

2.1 MAIN PARTS

(1) LCD panel

LC3x occupy 3 LCD panels (for Red, Green and Blue color).

No.	Item	Description
1	Product name	Blue: LCX043ANB-6 / LCX043APB-6 Red: LCX043ANB-7 / LCX043APB-7 Green: LCX043ANB-8 / LCX043APB-8
2	System type	TFT Active matrix
3	Pixels	1386 (H) x 788 (V)
4	Panel size	0.87"
5	Dot pitch	14 μm
6	Life	More than 15,000h (@Ta ≤25°C, worst UV filter combination)

(2) Lamp

No.	Item	Description
1	Input electricity	100W
2	Type	UHP lamp
3	Arc length	1mm

2.2 AV TERMINALS

No.	MODEL NAME	REAR								FRONT		
		A/V In	S-video In	YP_BP_R In	DVI In	TV as Center	Monitor Out	S-video Out	Audio to Hi-Fi	A/V In	S-video In	Memory Card In
1	50V500	3	2	2	1	1	1	1	1	1	1	1
2	60V500	3	2	2	1	1	1	1	1	1	1	1
3												
4												
5												
6												
7												
8												
9												
10												

I. SPECIFICATION

3. White Balance

HIGH: 14,700K+23MPCD (X=0.260±0.01, Y=0.280±0.01)
MEDIUM: 7500K+0MPCD (X=0.301±0.02, Y=0.311±0.02)
STANDARD: 6500K+0MPCD (X=0.313±0.02, Y=0.329±0.02)
Black/White: 5400K+0MPCD (X=0.334±0.02, Y=0.343±0.02)
at screen center

4 Performance specifications

ITEM			SPECIFICATIONS		REMARK CONDITION
Chassis			LC37	LC37F	
Screen size			50"	60"	
P# of optical engine assy.			UE22331	UE22334	
White balance for TV mode at screen center	HIGH		14700K+23MPCD (0.260±0.01, 0.280±0.01)		
	MEDIUM		7500K+0MPCD (0.301±0.02, 0.311±0.02)		
	STANDARD		6500K+0MPCD (0.313±0.02, 0.329±0.02)		
	Black/White		5400K+0MPCD (0.335±0.02, 0.343±0.02)		
Color purity	ΔX		Center ± 0.05		
	ΔY		Center ± 0.05		
Color band	Vertical		Not inferior to limit sample		
	Horizontal		Not inferior to limit sample		
Brightness	Center	TYP	370 cd/m²	257 cd/m²	
		MIN	240 cd/m²	166 cd/m²	
	Image Corner / Image Center		30%min		
Contrast ratio	Normally white / 0% Black		400		
Raster location	Overscan (V)		+4%		
	Overscan (H)		+4%		
	TILT		MAX ±3mm	MAX ±4mm	
Dust spot and Shadow	Red		Less than 6 pixels size		
	Green		Less than 4 pixels size		
	Blue		Less than 8 pixels size		
	Other		< Φ3.0		
Lamp flicker			No		

BACK TO ADJUSTMENTS

I. SPECIFICATION

5.0 Terminals and other functions

5.1 Available signal format and frequency

(1) Amplitude

Item		In/Out	Impedance	Amplitude
Composite video		Input	Termination: 75ohm±5%	1.0±0.2Vp-p
		Output	Output Impedance:75ohm±5%	
S video	Y	Input	Termination: 75ohm±5%	1.0±0.2Vp-p
		Output	Output Impedance:75ohm±5%	
	C	Input	Termination: 75ohm±5%	0.286±0.1Vp-p
		Output	Output Impedance:75ohm±5%	
Component	Y	Input	Termination: 75ohm±5%	1.0±0.2Vp-p
	Cb/Cr	Input	Termination: 75ohm±5%	0.7±0.2Vp-p
	Pb/Pr	Input	Termination: 75ohm±5%	0.7±0.2Vp-p
Audio		Input	Termination: 47k-ohm±5%	Mean input level: 470mVrms Max input level: 2.0Vrms
		Output	Output Impedance: less than1k-ohm	470mVrms

Sync. signal polarity: Negative P-P value of the reference white level and the top of the sync. Signal

(2) Frequency

Item	System	fh	fv
Composite video, S video	NTSC	15.734±0.3 kHz	60±3 Hz
Component video	480i	15.734±0.3 kHz	60±3 Hz
	480p	31.5±0.3 kHz	60±3 Hz
	720p	45.0±0.3 kHz	60±3 Hz
	1080i	33.75±0.3 kHz	60±3 Hz

5.2 Terminal shape

Item		In/Out	Terminal shape
Composite video		Input	US pin
		Output	US pin
S video	Y	Input	US pin
		Output	US pin
	C	Input	US pin
		Output	US pin
Component	Y	Input	US pin
	Cb/Cr	Input	US pin
	Pb/Pr	Input	US pin
Audio		Input	US pin
		Output	US pin

I. SPECIFICATION

5.3 DVI Specification

5.3.1 General Specification

No.	Item	Specification	Condition
1	Input impedance	100Ω ± 20Ω	
2	Minimum Differential Sensitivity	150mVp-p	
3	Receptacle	DVI-D	
4	Standard	DVI V1.0	
5	EDID	V1.3	
6	TMDS	Single Link	
7	Timings	480p/720p/1080i/480i	
8	HDCP	V1.0	

5.3.2 DVI Connector Specification

Pin	Signal Name
1	T.M.D.S. Data2-
2	T.M.D.S. Data2+
3	T.M.D.S. Data2/4 Shield
4	T.M.D.S. Data4-
5	T.M.D.S. Data4+
6	DDC Clock
7	DDC Data
8	No Connect
9	T.M.D.S. Data1-
10	T.M.D.S. Data1+
11	T.M.D.S. Data1/3 Shield
12	T.M.D.S. Data3-
13	T.M.D.S. Data3+
14	+5V Power
15	Ground (for+5V)
16	Hot Plug Detect
17	T.M.D.S. Data0-
18	T.M.D.S. Data0+
19	T.M.D.S. Data0/5 Shield
20	T.M.D.S. Data5-
21	T.M.D.S. Data5+
22	T.M.D.S. Clock Shield
23	T.M.D.S. Clock+
24	T.M.D.S. Clock-
Frame	G N D

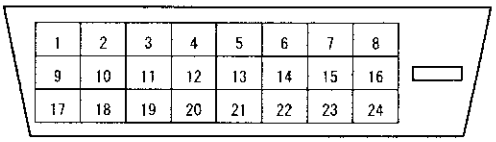

Front View

BACK TO ADJUSTMENTS

I. SPECIFICATION

6.0 Aspect specification for each Input Source

Aspect, Virtual HD, Black Side Panel, Vertical Position, PIP Mode, Color System

6.1 Aspect mode

6.1.1 Aspect mode

(1) Auto Aspect: OFF

Input Signal					Aspect Mode					
		Format	Aspect	Video ID	16:9 Standard	16:9 Zoom	4:3 Standard	4:3 Expanded	4:3 Zoom 1	4:3 Zoom 2
ANT A/B	Video	NTSC	4x3	–	✔	✔	✔	✔	✔	✔
Input 1	YP_BP_R	480i	–	No Video ID	✔	✔	✔	✔	✔	✔
			4x3	4x3						
			Letter	Letter						
			16x9	16x9						
		480p	4x3/16x9	–						
		720p	16x9	–	✔	✔	–	–	–	–
		1080i	16x9	–						
	DVI	480i	4x3/16x9	–	✔	✔	✔	✔	✔	✔
		480p	4x3/16x9	–						
		VGA								
		720p	16x9	–	✔	✔	–	–	–	–
		1080i	16x9	–						
Input 2	YP_BP_R	480i	–	No Video ID	✔	✔	✔	✔	✔	✔
			4x3	4x3						
			Letter	Letter						
			16x9	16x9						
		480p	4x3/16x9	–						
		720p	16x9	–	✔	✔	–	–	–	–
		1080i	16x9	–						
	Video	NTSC	–	No Video ID	✔	✔	✔	✔	✔	✔
			4x3	4x3						
			Letter	Letter						
			16x9	16x9						
Input 3	Video S-Video	NTSC	–	No Video ID	✔	✔	✔	✔	✔	✔
			4x3	4x3						
			Letter	Letter						
			16x9	16x9						
Input 4	Video S-Video	NTSC	–	No Video ID	✔	✔	✔	✔	✔	✔
			4x3	4x3						
			Letter	Letter						
			16x9	16x9						
Input 5	Video S-Video	NTSC	–	No Video ID	✔	✔	✔	✔	✔	✔
			4x3	4x3						
			Letter	Letter						
			16x9	16x9						
Photo MC	YP_BP_R	–	16x9	–	✔	–	–	–	–	–
Horizontal Expansion					100%	133%	75%	100%	100%	133%
Vertical Expansion					100%	133%	100%	110%	133%	176%

BACK TO ADJUSTMENTS

I. SPECIFICATION

6.1.2 Auto Aspect: ON

Input Signal					Aspect					
		Format	Aspect	Video ID	16:9 Standard	16:9 Zoom	4:3 Standard	4:3 Expanded	4:3 Zoom 1	4:3 Zoom 2
ANT A/B	Video	NTSC	4x3	–	✔	✔	✔	✔	✔	✔
Input 1	YP_BP_R	480i	–	No Video ID	✔	✔	✔	✔	✔	✔
			4x3	4x3	–	–	✔	✔	✔	✔
			Letter	Letter						
			16x9	16x9	✔	✔	–	–	–	–
		480p	4x3/16x9	–	✔	✔	✔	✔	✔	✔
		720p	16x9	–	✔	✔	–	–	–	–
		1080i	16x9	–						
	DVI	480i	4x3/16x9	–	✔	✔	✔	✔	✔	✔
		480p	4x3/16x9	–						
		VGA								
		720p	16x9	–	✔	✔	–	–	–	–
		1080i	16x9	–						
Input 2	YP_BP_R	480i	–	No Video ID	✔	✔	✔	✔	✔	✔
			4x3	4x3	–	–	✔	✔	✔	✔
			Letter	Letter						
			16x9	16x9	✔	✔	–	–	–	–
		480p	4x3/16x9	–	✔	✔	✔	✔	✔	✔
		720p	16x9	–	✔	✔	–	–	–	–
		1080i	16x9	–						
	Video	NTSC	–	No Video ID	✔	✔	✔	✔	✔	✔
			4x3	4x3	–	–	✔	✔	✔	✔
			Letter	Letter						
			16x9	16x9	✔	✔	–	–	–	–
Input 3	Video S-Video	NTSC	–	No Video ID	✔	✔	✔	✔	✔	✔
			4x3	4x3	–	–	✔	✔	✔	✔
			Letter	Letter						
			16x9	16x9	✔	✔	–	–	–	–
Input 4	Video S-Video	NTSC	–	No Video ID	✔	✔	✔	✔	✔	✔
			4x3	4x3	–	–	✔	✔	✔	✔
			Letter	Letter						
			16x9	16x9	✔	✔	–	–	–	–
Input 5	Video S-Video	NTSC	–	No Video ID	✔	✔	✔	✔	✔	✔
			4x3	4x3	–	–	✔	✔	✔	✔
			Letter	Letter						
			16x9	16x9	✔	✔	–	–	–	–
Photo MC	YP_BP_R	540p	16x9	–	✔	–	–	–	–	–
Horizontal Expansion					100%	133%	75%	100%	100%	133%
Vertical Expansion					100%	133%	100%	110%	133%	176%

BACK TO ADJUSTMENTS

I. SPECIFICATION

6.1.3 Aspect Mode Resolution

4x3 Format 16x9 Format

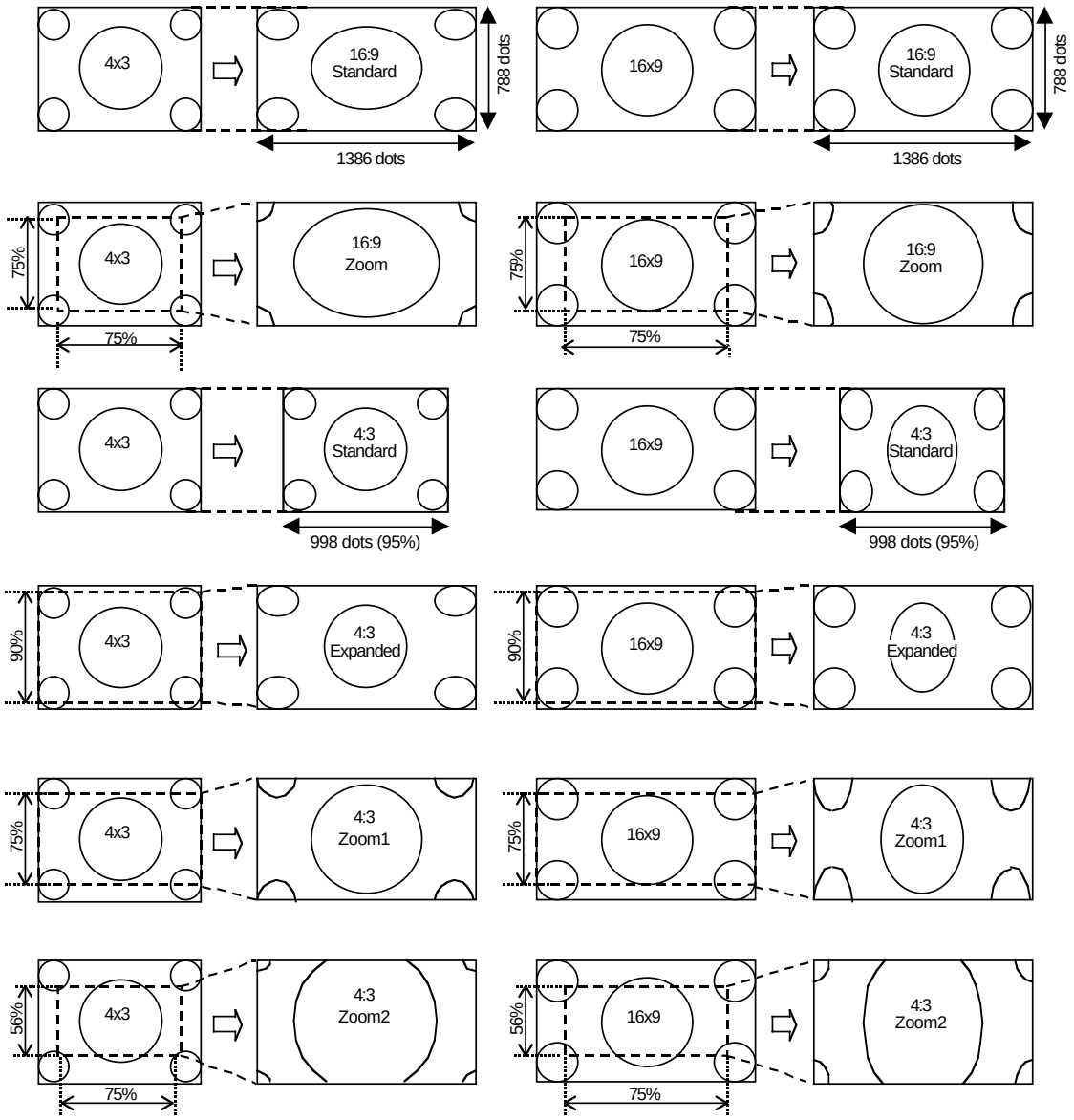

4:3 Expanded Mode

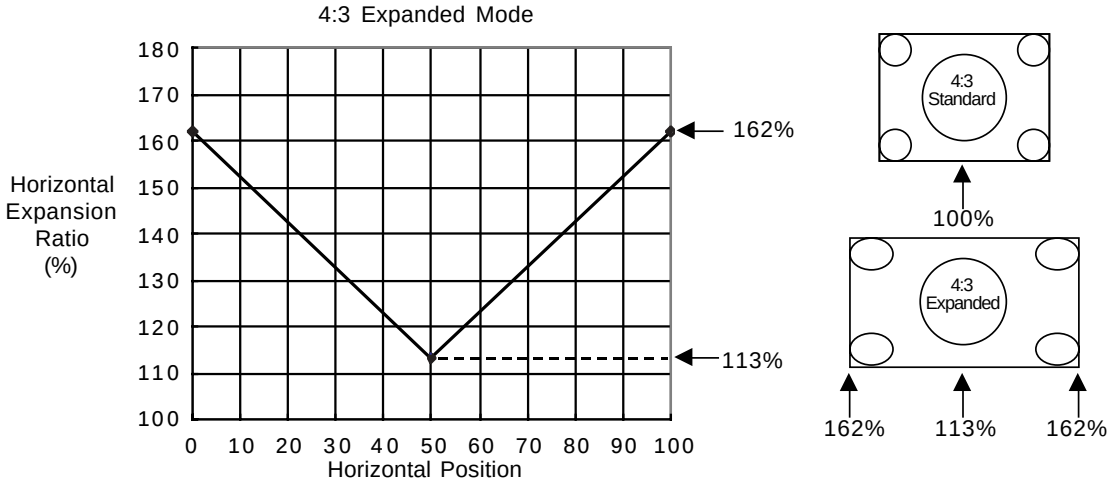

BACK TO ADJUSTMENTS

I. SPECIFICATION

6.1.4 Black Side Panel Operation

Menu Black Side Panel: OFF

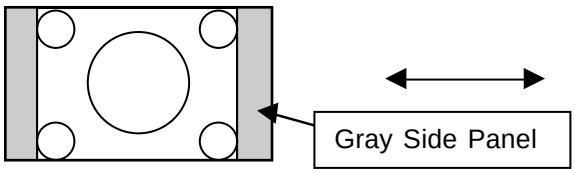

Menu Black Side Panel: ON

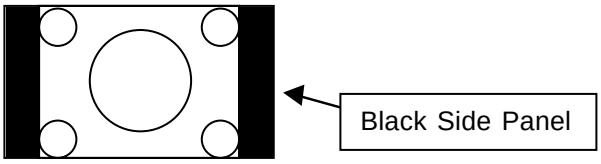

6.1.5 Vertical Position Operation

Input				Vertical Position					
				16:9 Standard	16:9 Zoom	4:3 Standard	4:3 Expanded	4:3 Zoom1	4:3 Zoom2
ANT A/B	Video	NTSC	4x3	±0	±10 Step	±0	±10 Step	±10 Step	±10 Step
Video 1	YP_BP_R	480i	4x3	±0	±10 Step	±0	±10 Step	±10 Step	±10 Step
		480p	16x9						
		720p	16x9	±0	±10 Step	–	–	–	–
		1080i							
	DVI	480i	4x3	±0	±10 Step	±0	±10 Step	±10 Step	±10 Step
		480p	16x9						
		720p	16x9	±0	±10 Step	–	–	–	–
		1080i							
Video 2	YP_BP_R	480i	4x3	±0	±10 Step	±0	±10 Step	±10 Step	±10 Step
		480p	16x9						
		720p	16x9	±0	±10 Step	–	–	–	–
		1080i							
	Video	NTSC	4x3 16x9	±0	±10 Step	±0	±10 Step	±10 Step	±10 Step
Video 3	Video S-Video	NTSC	4x3 16x9	±0	±10 Step	±0	±10 Step	±10 Step	±10 Step
Video 4	Video S-Video	NTSC	4x3 16x9	±0	±10 Step	±0	±10 Step	±10 Step	±10 Step
Video 5	Video S-Video	NTSC	4x3 16x9	±0	±10 Step	±0	±10 Step	±10 Step	±10 Step
PIP Mode	POP/PIP/SPLIT SURF12/STROBE			±0					

I. SPECIFICATION

6.2 PIP MODE

6.2.1 Available Mode

Model	Chassis	Job	PIP Mode									
			POP	PIP 4x3	PIP 16x9	SPLIT	SURF 12	SURF 3	POP/PIP Main Freeze	POP/PIP Sub Freeze	SPLIT Sub Freeze	STROBE 3
50V500	LC37		✔	✔	✔	✔	✔ ANT A/B	–	✔	✔	✔	✔
60V500	LC37B											

PIP Mode	Sub / Main	Aspect	ANT A/B Video/S-Video 480i	Video/S-Video 480i	480p	720p	1080i
			4x3	16x9	4x3/16x9	16x9	16x9
POP	ANT A/B Video/S-Video	4x3/16x9	✔	✔	–	–	✔
	480i	4x3/16x9	✔	✔	–	–	✔
PIP 4x3	1080i	16x9	✔	–	–	–	–
PIP 16x9	1080i	16x9	–	✔	–	–	✔
SPLIT	ANT A/B Video/S-Video 480i	4x3/16x9	✔	✔	✔	✔	✔
	480p	4x3/16x9	✔	✔	✔	✔	✔
	720p	16x9	✔	✔	✔	✔	✔
	1080i	16x9	✔	✔	✔	✔	✔
STROBE	ANT A/B Video/S-Video 480i	4x3/16x9	✔	✔	–	–	–
SURF12	–	–	✔ ANT A/B	–	–	–	–

I. SPECIFICATION

6.2.2 PIP Mode Resolution

POP Mode

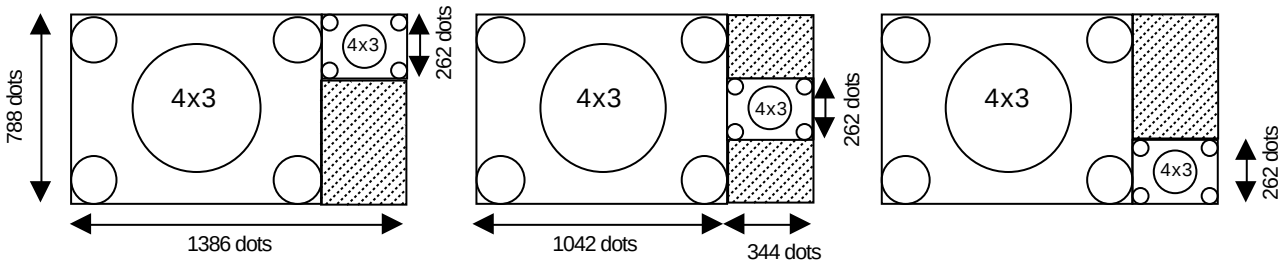

PIP Mode

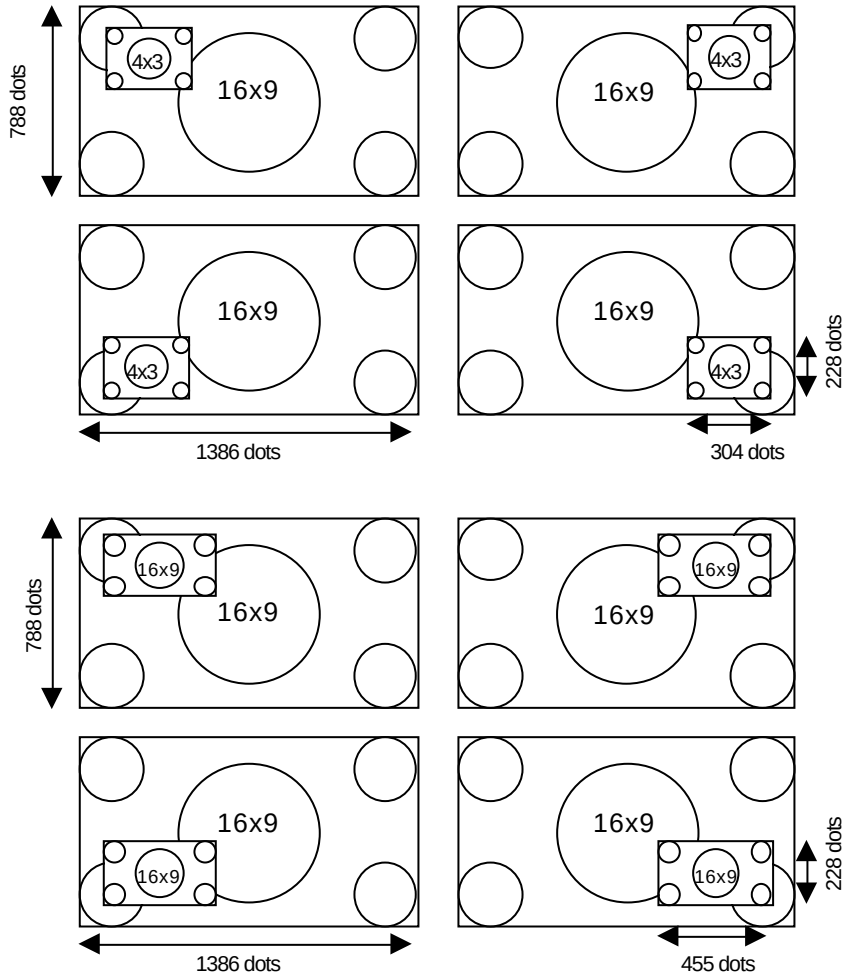

SPLIT Mode STROBE Mode SURF12 Mode

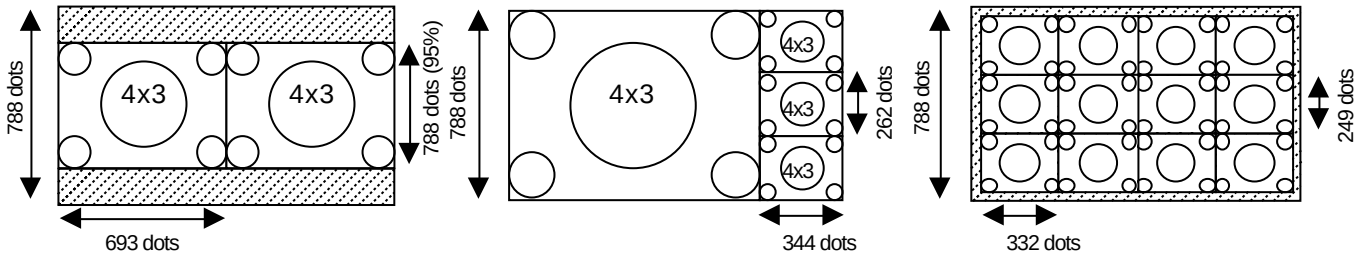

BACK TO ADJUSTMENTS

II. FEATURES AND FUNCTIONS
1.0 FRONT PANEL CONTROLS

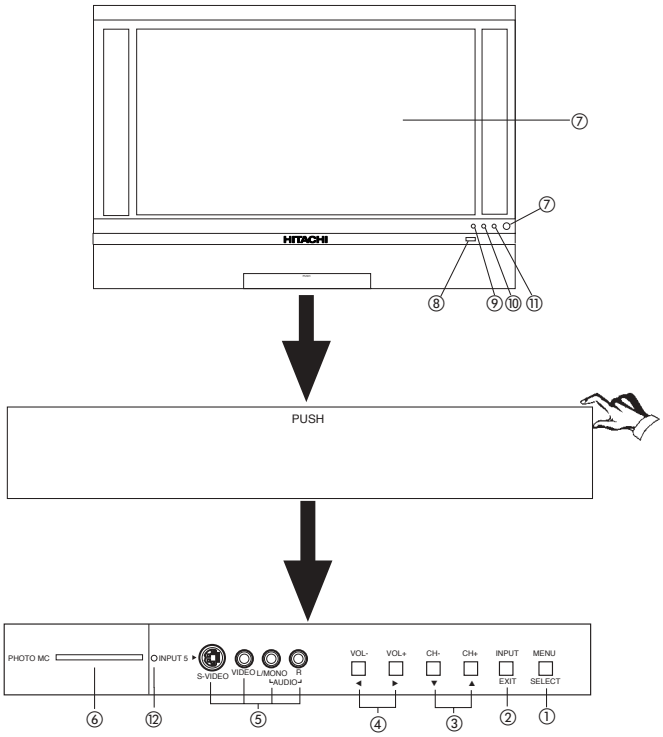

① **MENU/SELECT button**

This button allows you to enter the MENU, making it possible to set TV features to your preference without using the remote. This button also serves as the SELECT button when in MENU mode.

② **INPUT/EXIT button**

Press this button to select the current antenna source, VIDEO: 1, 2, 3, 4, 5 or alternate antenna source. Your selection is shown in the top right corner of the screen. This button also serves as the EXIT button when in MENU mode.

NOTES: Your remote control does not have an INPUT button. To change to video inputs, press VID1~VID5 buttons depending on your choice. To change antenna source, press the ANT button on your remote control.

③ **CHANNEL selector**

Press these buttons until the desired channel appears in the top right corner of the TV screen. These buttons also serve as the cursor down (▼) and up (▲) buttons when in MENU mode.

④ **VOLUME level**

Press these buttons for your desired sound level. The volume level will be displayed on the TV screen. These buttons also serve as the cursor left (◀) and right (▶) buttons when in MENU mode. When the TV power is turned OFF at a volume level 31 or greater, the volume level will default to 30 when the TV is turned ON. However, if it is set to a level 30 or less, the volume level will be at the level it was set when the TV is turned ON.

⑤ **FRONT INPUT JACKS (INPUT 5)**

Use these audio/video jacks for a quick hook-up from a camcorder or VCR to instantly view your favorite show or new recording. Press the INPUT/EXIT button on the front control panel until VIDEO: 5 appears in the top right corner of the TV screen. If you have mono sound, insert the audio cable into the left audio jack.

⑥ **PHOTO MC**

Insert a PC card adapter with your Photo memory card to view the digital still pictures (see page 44).

To view your digital pictures, an adapter is required. Below are adapters that are tested with your television. Please find out which memory card you have and acquire it from your local source.

Memory Card	Tested Samples
1. Secure Digital (SD) 3. Memory Stick (MS) 4. Smart Media (SM)	Dazzle 4 in 1 (DM-9400) or SanDisk 4 in 1 (SDDR-6507)
5. Compact Flash I (CF I) 6. Compact Flash II (CF II)	Dazzle (DM-9000) or SanDisk (SDCF-38)
7. xD Picture Card	Olympus (MACF-10)

Notes: Adapter is subject to change for improvement.
Some terms used herein are trademarks of various companies.

II. FEATURES AND FUNCTIONS
1.0 FRONT PANEL CONTROLS (CONT.)

⑦ **IR RECEIVER/LEARNING AV NET sensor**
The screen area acts as the IR receiver (remote sensor) and the LEARNING AV NET sensor of the TV. When using the remote control, point it towards the screen for best response.

⑧ **POWER button**
Press this button to turn the TV on or off.

⑨ **POWER light**
This light is on during normal operation.
Light Blinking Slowly (2 seconds): television lamp is cooling down. It takes 12-15 seconds to warm up and about 2 minutes to cool down.

⑩ **TEMP indicator**
This light is off during normal operation.
If this indicator is lit, the optic unit is too hot. If this indicator is blinking, the cooling fan has stopped. Please call service.

⑪ **LAMP indicator -** NORMAL OPERATION INDICATOR IS OFF
If light is lit, the lamp has failed. See page 29-32 for lamp replacement procedure. Consult your Hitachi dealer for proper part.
If light is blinking, lamp cover is not assembled securely after replacement.

NOTES:

1.

INDICATOR	INDICATION	MEANING	ACTION
LAMP LED	LIGHT ON	NO LAMP LIGHT or BROKEN LAMP	Need to replace if LAMP still does not light by "Power On" again. Check assembly condition of LAMP UNIT
	BLINKING	WRONG LAMP UNIT ASSEMBLY / LAMP DOOR OPEN	
TEMP LED	LIGHT ON	Too hot inside the OPTIC unit	
	BLINKING	COOLING FAN STOPPED	
POWER	LIGHT ON	NORMAL OPERATION	
	SLOWLY BLINKING	COOL DOWN	

2. If the LAMP, TEMP, and POWER LED are blinking in the order below, the television is warming up.

POWER → TEMP → LAMP

⑫ **PHOTO MC LED LIGHT INDICATOR**
Shows the status of the memory card.

IMPORTANT NOTES:
1. A small number of missing, discolored, or lit all the time dots or pixels is characteristic of TFT LCD technology due to manufacturing process for such technology irrespective of manufacturer. If your LCD has defective pixels, it should not be considered defective.
2. Since LCD Rear PTV incorporates a high pressure lamp to display an image, it may take about one minute for the picture to become stable, after the power has been turned on. After extended use, the picture may darken, the color may look unusual, or the lamp "goes out," (burns out). You may hear a "pop" sound when the lamp "goes out." These are common characteristics of the lamp, and should not be considered defective.
3. LCD Rear PTV incorporates an advanced cooling fan system to prevent from overheating. If you hear the cooling fan, it should not be considered defective.
4. If you hear a "cracking" sound from the TV cabinet, it is due to the TV's cabinet expanding and contracting due to room temperature changes. It has no effect on the TV's functions.

II. FEATURES AND FUNCTIONS

1.0 FRONT PANEL CONTROLS (CONT.)

The front panel jacks are provided as a convenience to allow you to easily connect a camcorder or VCR as shown in the following examples:

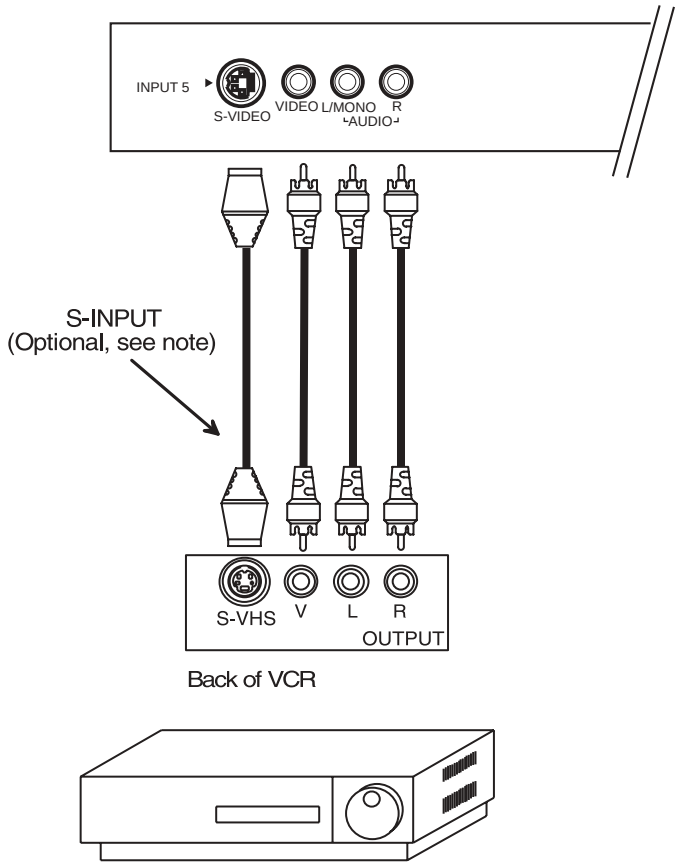

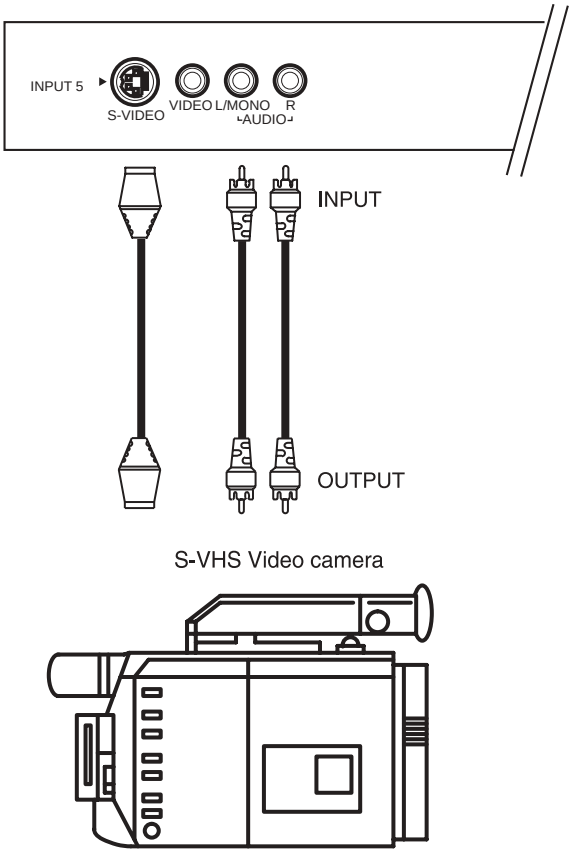

NOTE:	1. Completely insert connection cord plugs when connecting to front panel jacks. If you do not, the played back picture may be abnormal. 2. If you have a S-VHS VCR, use the S-INPUT cable in place of the standard video cable. 3. If you have a mono VCR, insert the audio cable into the left audio jack of your TV.

II. FEATURES AND FUNCTIONS
2.0 REAR PANEL JACKS

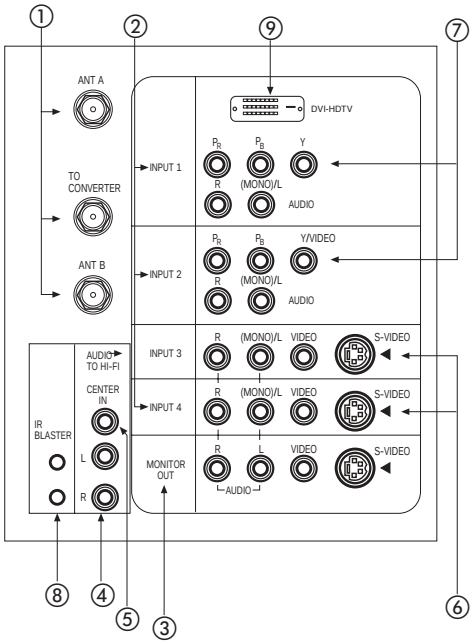

① **Antenna Input/Output**

ANT A- A 75-Ohm RF antenna or CATV (Cable TV) input. ANT A can be displayed as a main picture or sub-picture.

ANT B- A 75-Ohm RF antenna or CATV (Cable TV) input. ANT B can only be displayed as a main picture. ANT B cannot be displayed as a sub-picture.

TO CONVERTER- This antenna output allows the ANT A connection to pass directly to a different source, such as a cable box, only when ANT B is displayed as a main picture.

② **Audio/Video Inputs 1, 2, 3 and 4**

The VID1~VID4 buttons will select each video source each time they are pressed. Use the audio and video inputs to connect external devices, such as VCRs, camcorders, laserdisc players, DVD players etc. (If you have mono sound, insert the audio cable into the left audio jack.)

NOTE:	You may use VIDEO or S-VIDEO inputs to connect to INPUT 3 and 4, but only one of these inputs may be used at a time.

③ **MONITOR OUT**

These jacks provide fixed audio and video signals which are used for recording. Use the S-VIDEO Output for high quality video output.

NOTE:	S-VIDEO output may be used for recording only when the input is of S-VIDEO type.

④ **AUDIO TO HI-FI Output**

These jacks provide variable audio output to a separate stereo amplifier. With this connection, the audio to the stereo can be controlled by the television's main volume.

⑤ **CENTER IN (Input)**

This jack is for stereo amplifiers with center signal capability. This feature allows the TV speakers to be used as a center speaker. The TV must be set as a center channel by selecting "TV as Center" on the Internal Speakers Settings of the Audio Menu.

⑥ **S-VIDEO Inputs 3 and 4**

Inputs 3 and 4 provide S-VIDEO (Super Video) jacks for connecting equipment with S-VIDEO output capability.

II. FEATURES AND FUNCTIONS
2.0 REAR PANEL JACKS (CONT.)

⑦ **Component: Y-P_BP_R Inputs**

Inputs 1 and 2 provide Y-P_BP_R jacks for connecting equipment with this capability, such as a DVD player or Set Top Box. You may use composite video signal for INPUT:2.

NOTES:

1. Do not connect composite VIDEO and S-VIDEO to Input 3, 4 or 5 at the same time. S-VIDEO has priority over VIDEO input.
2. Your component outputs may be labeled Y, B-Y, and R-Y. In this case, connect the components B-Y output to the TV's P_B input and the components R-Y output to the TV's P_R input.
3. Your component outputs may be labeled Y-C_BC_R. In this case, connect the component C_B output to the TV's P_B input and the component C_R output to the TV's P_R input.
4. It may be necessary to adjust TINT to obtain optimum picture quality when using the Y-P_BP_R inputs.
5. To ensure no copyright infringement, the MONITOR OUT output will be abnormal, when using the Y-P_BP_R jacks.
6. Input 2 (Y/VIDEO) can be used for composite video and component video input.

⑧ **IR Blaster**

This jack provides IR output to your external components (VCR, Cable box, DVD player, etc.). With this connection, your external components can automatically be controlled by the AV Net feature. This connection will allow you to control the external components with your television's remote control (see page 40).

⑨ **DVI-HDTV Input (Input 1)**

Use this DVI-HDTV Input for your external devices with DVI-HDTV output such as a Set-Top-Box, high-band DTV decoders, DVD players with Digital Content Protection.

NOTES:

1. Only DTV format such as 1080i, 720p, 480i and 480p are available for DVI-HDTV input.
2. The DVI-HDTV input is NOT compatible when used with a DVD player from a personal computer.
3. When connecting a Set-Top-Box with a copy-protect digital out terminal, a high definition picture can be displayed on the screen in its digital form.

II. FEATURES AND FUNCTIONS
2.0 REAR PANEL JACKS (CONT.)

TYPICAL FULL-FEATURE SETUP

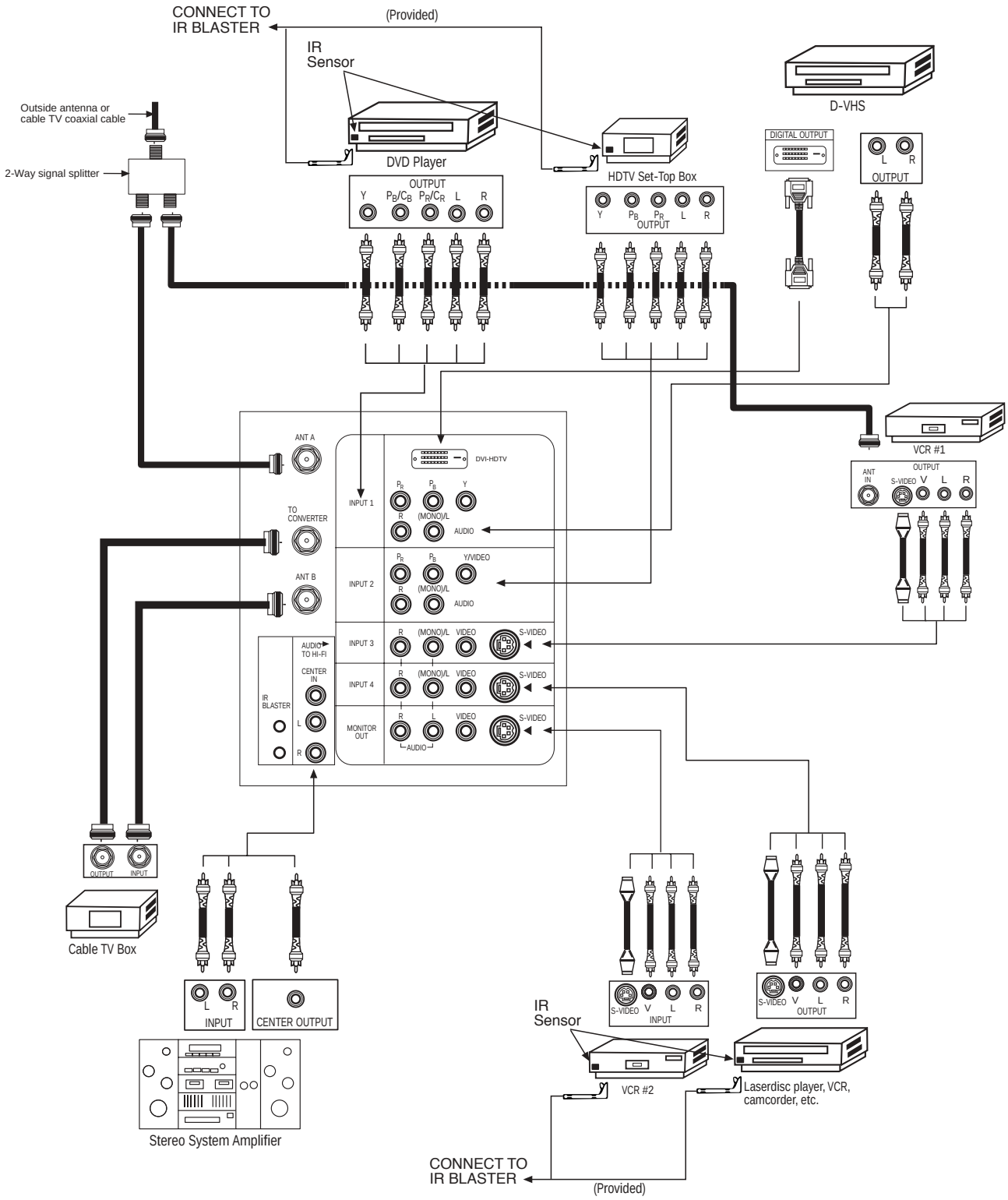

NOTES:
1. Connect only 1 component to each input jack.
2. Follow connections that pertain to your personal entertainment system.
3. Composite video signal can be input to Input2~Input5.
4. Cables are not included with the purchase of this TV, except when noted as “provided”.

II. FEATURES AND FUNCTIONS
2.0 REAR PANEL JACKS (CONT.)

- S-VIDEO connections are provided for high performance laserdisc players, VCRs etc. that have this feature. Use these connections in place of the standard video connection if your device has this feature.
- If your device has only one audio output (mono sound), connect it to the left audio jack on the television.
- Refer to the operating guide of your other electronic equipment for additional information on connecting your hook-up cables.
- A single VCR can be used for VCR #1 and VCR #2, but note that a VCR cannot record its own video or line output (INPUT: 3 in the example on page 27). Refer to your VCR operating guide for more information on line input-output connections.
- You may use VIDEO or S-VIDEO inputs to connect to Input 3, Input 4 or Input 5, but only one of these may be used at a time.
- Connect only 1 component (VCR, DVD player, camcorder, etc.) to each input jack.
- COMPONENT: Y-P_BP_R (Input 1 &2) connections are provided for high performance components, such as DVD players and set-top-boxes. Use these connections in place of the standard video connection if your device has this feature. Input 2 accepts both composite and component video signals.
- Your component outputs may be labeled Y, B-Y, and R-Y. In this case, connect the components B-Y output to the TV's P_B input and the components R-Y output to the TV's P_R input.
- Your component outputs may be labeled Y-C_BC_R. In this case, connect the components C_B output to the TV's P_B input and the components C_R output to the TV's P_R input.
- You may use composite video signal for Input 2~Input 5.
- It may be necessary to adjust TINT in the Video menu to obtain optimum picture quality when using the Y-P_BP_R inputs.
- To ensure no copyright infringement, the MONITOR OUT output may be abnormal, when using the Y-P_BP_R or DVI jacks.
- When using DVI input from a Set-Top-Box, it is recommended to use a 1080i or 720p input signal.

II. FEATURES AND FUNCTIONS

3.0 LAMP REPLACEMENT

Lamp Life

The lamp life may vary based on usage of the LCD Rear PTV. Turning on and off frequently may shorten the life of the lamp.

Lamp Replacement

After extended use, if the TV picture turns dark, the color looks unusual or LAMP INDICATOR light turns on, then it is time to replace the lamp with a new lamp.

WARNING:

The lamp gets very hot! The lamp may explode if improperly handled. To avoid injury, please observe the following precautions.

- Do not open lamp compartment or attempt to remove lamp assembly unless the lamp assembly is being replaced.
- Unplug the product's power cord from the AC outlet before attempting to replace the lamp assembly.
- If the lamp is in use when failure occurs or if the lamp has exploded, wait at least 30-45 minutes for the lamp to cool before opening the lamp compartment or touching the lamp assembly or any broken pieces.
- Broken lamp pieces can cause injury. Handle with gloves to avoid cuts.
- Do not place any foreign objects inside the lamp compartment.
- When installing a new lamp, follow handling instruction included with the new lamp. Do not touch glass surface of new lamp.
- The lamp in this product contains Mercury. Dispose of properly in accordance with applicable environmental laws. For Recycling and Disposal information, contact your respective governmental agencies or the Electronic Industries Alliance at www.eiae.org (in the U.S.) or Electronic Product Stewardship Canada at www.epsc.ca (in Canada).

CAUTION!

A "LAMP" indicator will light when lamp becomes hot. Unplug product's power cord from the AC outlet and allow lamp to cool for at least 30-45 minutes. If "LAMP" indicator is still lit, check the lamp unit assembly.

NOTES:

- Contact your Hitachi dealer for a new lamp unit. Using other lamps may cause damage to the TV Set.
  TYPE NAME: LC37 LAMP ASSEMBLY
  PART NUMBER: UX21511
- When replacing the lamp, let it cool down completely, for approximately 30 to 45 minutes after the power has been switched off and A.C. cord has been unplugged.
- Do not touch the glass of the new lamp or make it dirty which can shorten the life of the lamp and reduce the picture quality.
- Keep the lamp out of the reach of children and away from flammable materials.
- Do not pour water onto the removed lamp or put any object inside the lamp.
- Once the lamp is removed, do not put flammable materials and metal objects inside the lamp receptacle on the TV set. Do not touch the receptacle.
- Install the new lamp securely, otherwise the picture may become dark or it may cause severe overheating.
- Install the lamp cover correctly, otherwise power will not come on.
- The lamp in this product contains Mercury. Dispose of properly in accordance with applicable environmental laws. For Recycling and Disposal information, contact your respective governmental agencies or the Electronic Industries Alliance at www.eiae.org (in the U.S.) or Electronic Product Stewardship Canada at www.epsc.ca (in Canada).

II. FEATURES AND FUNCTIONS
3.0 LAMP REPLACEMENT (CONT.)

1. Turn off the main power switch and unplug the power cord. Wait at least 30 minutes to allow the lamp to cool down before replacing it.

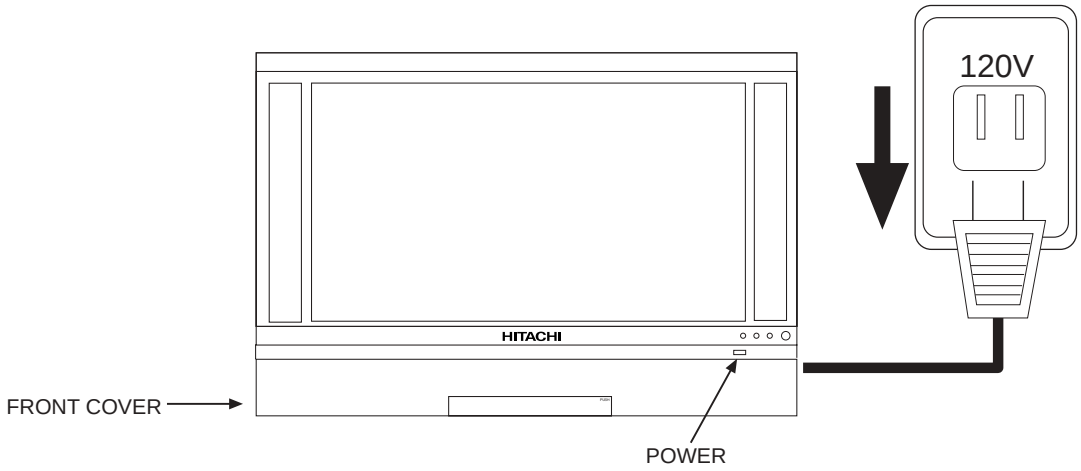

NOTE:	THE LAMP IS VERY HOT AND MAY CAUSE FIRE OR SEVERE BURNS. WAIT AT LEAST 30~45 MINUTES TO ALLOW THE LAMP TO COOL BEFORE PROCEEDING WITH LAMP REMOVAL.

2. Remove the front cover from the TV set. This is held by a snap on. Pull the front cover outwards until the quick snap on disengages.

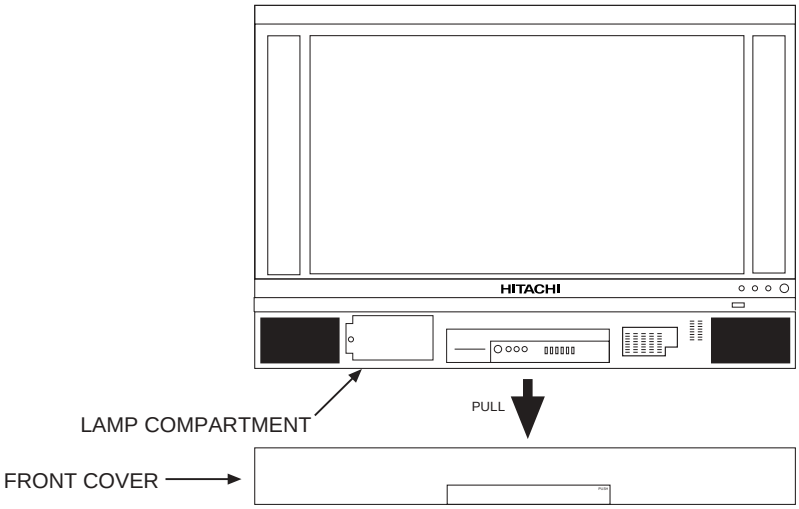

NOTE:	The lamp in this product contains Mercury. Dispose of properly in accordance with applicable environmental laws. For Recycling and Disposal information, contact your respective governmental agencies or the Electronic Industries Alliance at www.eiae.org (in the U.S.) or Electronic Product Stewardship Canada at www.epsc.ca (in Canada).

II. FEATURES AND FUNCTIONS
3.0 LAMP REPLACEMENT (CONT.)

3. Remove the screw securing the lamp cover with a Phillips head screw driver as shown. Remove the lamp cover.

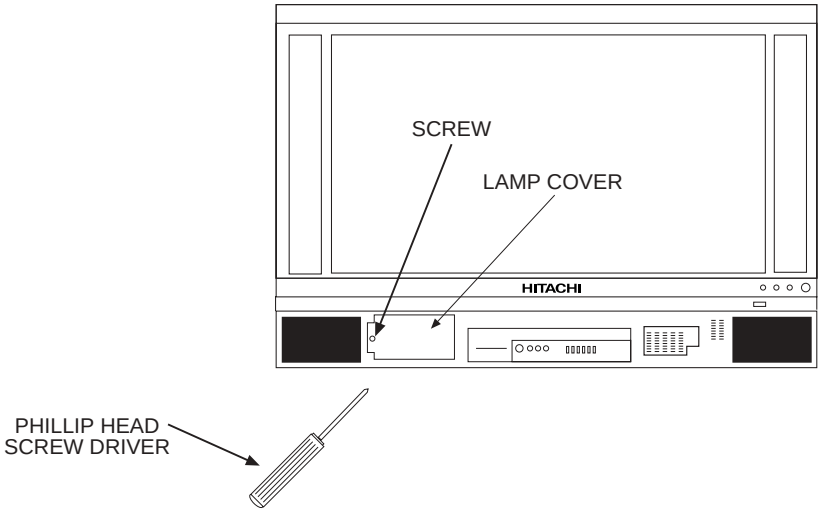

NOTE:	THE LAMP IS VERY HOT AND MAY CAUSE FIRE OR SEVERE BURNS. WAIT AT LEAST 30~45 MINUTES TO ALLOW THE LAMP TO COOL BEFORE PROCEEDING WITH LAMP REMOVAL.

4. Remove the two screws that hold the lamp in place. Remove the lamp unit by holding the lamp handle, then pulling outwards. Exercise caution when removing the lamp unit to avoid injury to your fingers.

NOTE:	DO NOT PUT YOUR HAND IN THE LAMP STORAGE AREA AFTER THE LAMP UNIT IS REMOVED, YOU MAY GET BURNED.

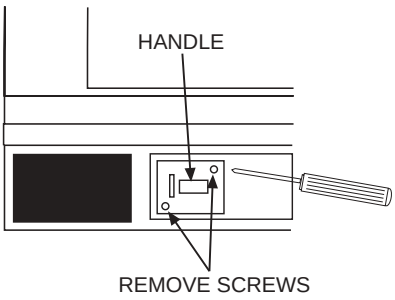

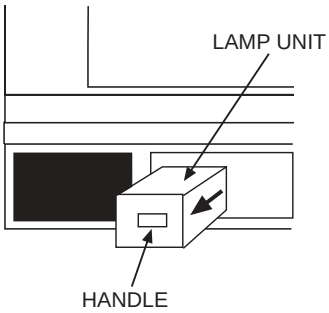

5. Replace with the new lamp.
   Place the removed lamp into the empty box of the replacement lamp. Do not touch the front glass of the new lamp or its receptacle. This may shorten the life of the lamp and reduce the picture quality.
   - Push the lamp unit back to its original position.
   - Tighten the screws firmly on the lamp unit. If they are loose, the TV may not operate correctly.

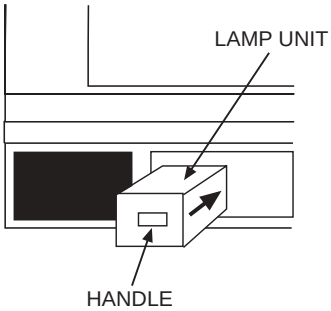

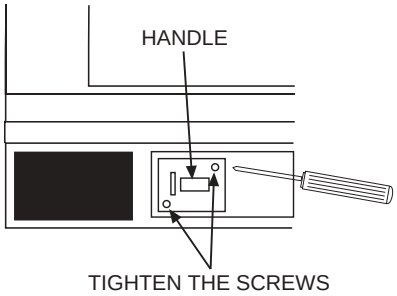

II. FEATURES AND FUNCTIONS
3.0 LAMP REPLACEMENT (CONT.)

6. Without installing the lamp cover, the power will be off and the Lamp Indicator will flash (see page 23). Be sure to install the lamp cover by re-engaging the two clips and tighten the screws before turning the power on, otherwise it may cause unusual colors.

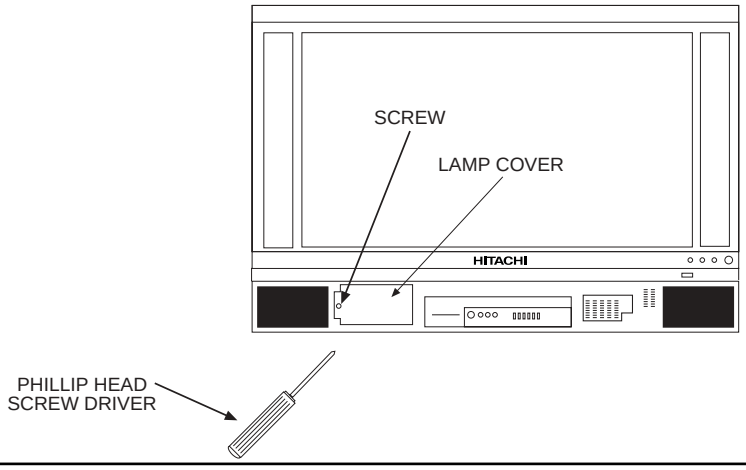

NOTE: IF POWER IS CONNECTED BEFORE THE LAMP COVER IS INSTALLED, THE POWER WILL BE OFF AND THE LAMP INDICATOR WILL FLASH (SEE PAGE 23).

7. Install the front cover as shown below. Put the front cover back in and align the snap on quick connect then push inwards holding the left and right side of the front cover until you hear a snap. Push the other snap on gently to make a good fit.

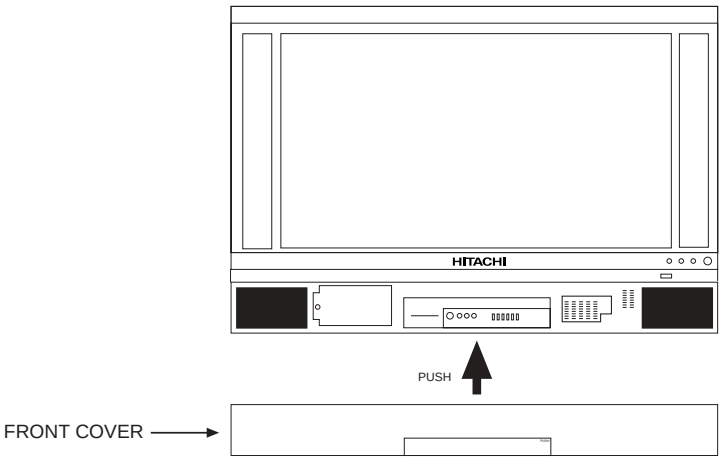

8. Plug power cord into AC outlet and turn on the main power switch.

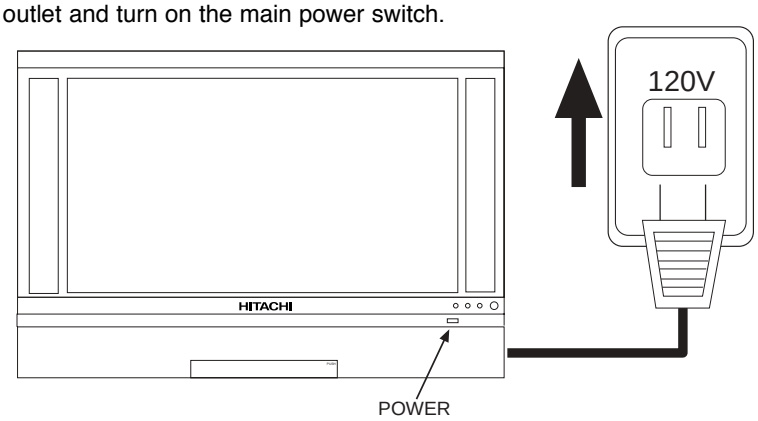

NOTE: The lamp in this product contains Mercury. Dispose of properly in accordance with applicable environmental laws. For Recycling and Disposal information, contact your respective governmental agencies or the Electronic Industries Alliance at www.eiae.org (in the U.S.) or Electronic Product Stewardship Canada at www.epsc.ca (in Canada).

II. FEATURES AND FUNCTIONS
4.0 ON-SCREEN-DISPLAY FEATURES

Video

Picture Mode	Select between the two picture modes; Day and Night.
Contrast	Adjust contrast.
Brightness	Adjust brightness.
Color	Adjust color.
Tint	Adjust tint.
Sharpness	Adjust sharpness.
Color Temperature	Set this to High for less intense color with more blue, set to Medium for natural color, set to Standard for standard colors or Black/White for more reddish color.
Black Enhancement	Adjust shadow detail in dark screens.
Contrast Mode	Choose Automatic Contrast settings.
Reset Video Settings	Choose the Reset Video settings.
Color Management	Adjust and balance individual colors to make either deeper or more pure according to preference.
Color Decoding	Adjust the percentage of Red, Green and Color according to preference.
Auto Color	The Auto Color function automatically monitors and adjusts the color to maintain constant color levels even after a program or channel changes. It also maintains natural flesh tones while preserving fidelity of background colors.
Noise Reduction	Reduces conspicuous noise in the picture.
Auto Movie Mode	Turn On/Off the 3:2 Pulldown detection feature.

Audio

Treble	Adjust the treble.
Bass	Adjust the bass.
Balance	Adjust the balance.
Sound Enhancement	Select SRS and BBE settings.
Audio Source	Select between three Audio Sources.
Internal Speakers	Select TV's internal speakers On/Off or use as center speaker.
Auto Noise Cancel	Eliminates the noise between stations.
Perfect Volume	Adjust volume in fixed setting.
Loudness	Adjust Loudness.

Aspect

Mode	Choose the picture format aspect ratio.

Chan. Manager

Ant A	View/edit Channel ID, Scan, and Lock settings in antenna A.
Ant B	View/edit Channel ID, Scan, and Lock settings in antenna B.

Locks

Change Access Code	Change Lock access code.
Engage Lock	Choose to lock channel, video input, and front panel.
TV Time Lock	Set specific time to Lock TV.
Movie Ratings	Block various types of movies and video types based on motion picture ratings.
TV Ratings	Block various types of movies and television programming based on a parental guide ratings.
Canadian Ratings (ENG)	Block various types of movies and television programming based on the Canadian ratings system.
Canadian Ratings (FRN)	Block various types of movies and television programming based on the Canadian French ratings system.

Setup

Menu Preference	Choose English, French, or Spanish text.
Screen Saver	Set the Screen Saver.
Set The Clock	Set the TV clock. It must be set before using the Lock feature.
Set The Inputs	Label Video Inputs , VCR, DVD, etc.
Set The Color System	Set tint and color coordinates for DTV programs.
Set Black Side Panel	Set the gray side bars on/off when watching 4:3 signals in standard mode.
Set Event Timer	Turn TV on and off once, daily, or weekly.
Set Closed Captions	Feature to display dialogue/text.

II. FEATURES AND FUNCTIONS
4.1 VIDEO SETTING

Video

Select Video to adjust picture settings and improve picture quality. You can customize each of the Video Inputs to your preference to increase viewing performance and pleasure depending upon the video program being viewed. If RESET is selected, only the selected mode will reset to initial conditions.

Picture Mode

Use this function to choose from automatic picture settings to optimize your TV's performance.

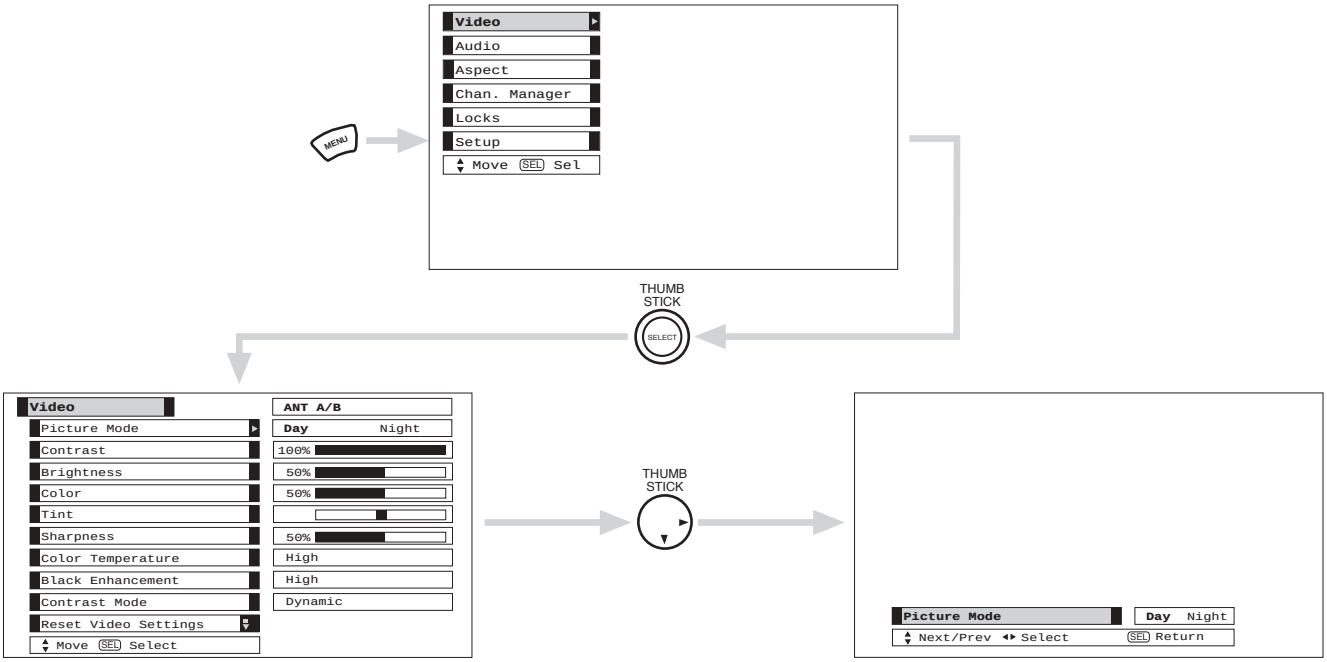

Use THUMB STICK ▲ or ▼ to highlight Picture Mode settings.

Function	Day	Night	Reset
Contrast	100%	90%	Reset the video menu settings on current input to the Day or Night conditions depending on the selected Video mode.
Brightness	50%	50%	
Color	50%	30%	
Tint	Center	Center	
Sharpness	50%	30%	
Color Temperature	High	Standard	
Black Enhancement	High	Off	
Contrast Mode	Dynamic	Normal	
Auto Color	Off	Off	
Noise Reduction	Off	Low	
Color Management (Set User Colors)	Off	On	
Auto Movie Mode (TV/Cinema Detection)	Off	Off	

Press EXIT to quit menu or select Picture Mode to return to previous menu.

II. FEATURES AND FUNCTIONS
4.1 VIDEO SETTING

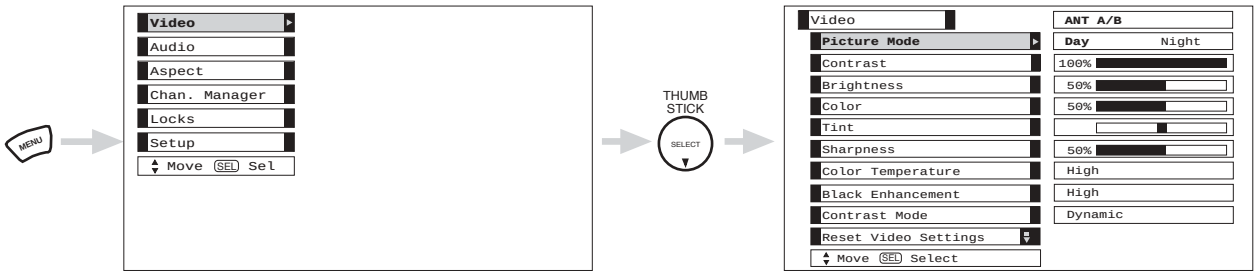

Use the THUMB STICK ▲ or ▼ to highlight the function to be adjusted.
Press down on THUMB STICK to select the function settings.
Press the THUMB STICK ◀ or ▶ to adjust the function.
Press MENU to return to main menu.
Press EXIT to quit menu.

Contrast	Use this function to change the contrast between black and white levels in the picture.
Brightness	Use this function to adjust overall picture brightness.
Color	Use this function to adjust the level of color in the picture.
Tint	Use this function to adjust flesh tones so they appear natural.
Sharpness	Use this function to adjust the amount of fine detail in the picture. Sharpness function will be disabled when Noise Reduction is On.
Color Temperature	Set this to High for cooler color with more blue, set to Medium for more natural color, set to Standard for accurate color or set to Black/White for more reddish color.
Black Enhancement	Use this function to enhance the shadow detail in dark scenes using the settings off, low, middle and high.

NOTES:
1. If CONTRAST is selected, you are adjusting CONTRAST. The additional menu items BRIGHTNESS, COLOR, TINT, and SHARPNESS can be selected and adjusted in the same manner.
2. It may be necessary to adjust TINT to obtain optimum picture quality when using the COMPONENT VIDEO Y-P_BP_R input jacks.

Contrast Mode	Use this function to choose between 3 Contrast Mode settings. Set to Dynamic for darker images more in the level of Black, set to Normal for a balanced White to Black level, and set to Auto for automatic Contrast selection.

II. FEATURES AND FUNCTIONS
4.1 VIDEO SETTING

Reset Video Settings

This function allows you to Reset the Video Menu Settings of the present input and return it to the Day or Night conditions depending on the selected Video mode.

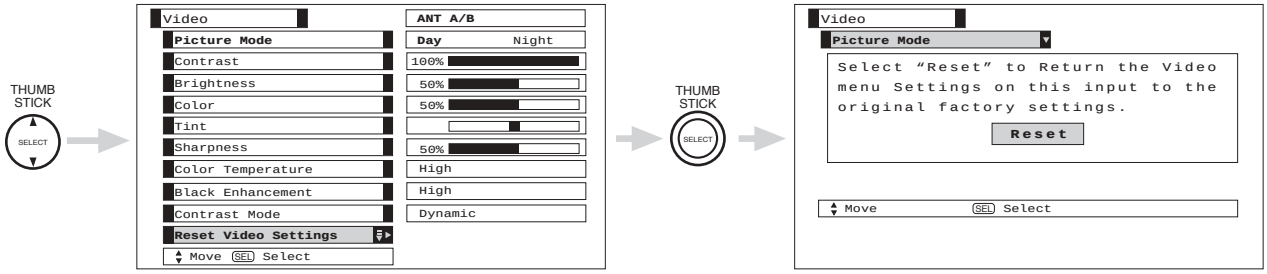

Use THUMB STICK to highlight functions.
Press down on THUMB STICK to select Reset Video Settings.

Use THUMBSTICK ▼ to access other video settings.

You can customize each of the Video Inputs to your preference to increase viewing performance and pleasure, depending upon the video program being viewed. If Reset is selected, only the selected mode will reset to the initial conditions as explained above.

If Reset is selected in Video:1 mode, only Video:1 mode will return to factory conditions.

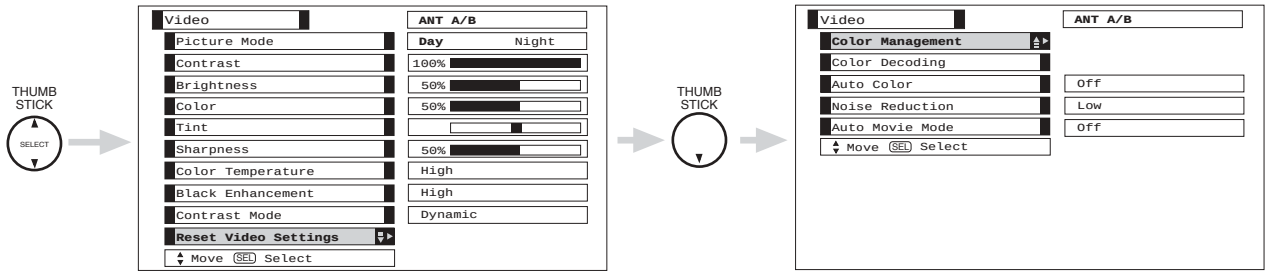

Color Management

Use this function to adjust and balance the listed individual colors to make them either deeper or more pure depending on the user's preference.

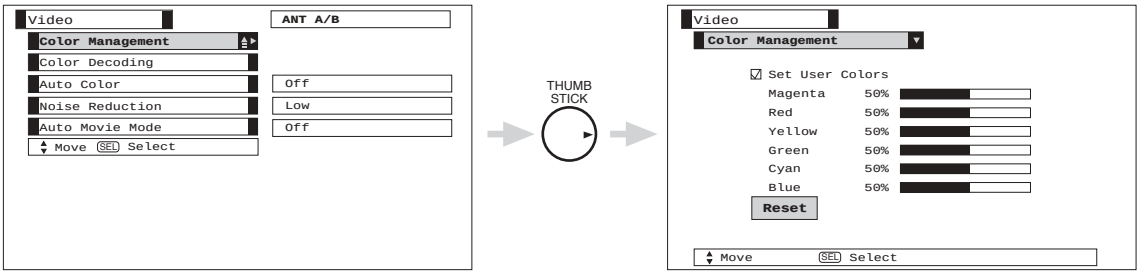

Use THUMBSTICK to highlight function.
Press down to select the User Colors setting. When the function has a "√" in the box, it is ON.
Press THUMBSTICK ◀, ▶, ▼, ▲, to highlight and adjust individual colors.
Use THUMBSTICK to highlight and select "Reset" to return all colors to default settings.

NOTE: When the Set User Colors box is not checked off, the listed colors will be grayed out.

II. FEATURES AND FUNCTIONS
4.1 VIDEO SETTING

Color Decoding

Use this function to adjust the percentage of Red, Green and Color according to the user's preference. Use Tint to adjust flesh tones so they appear natural.

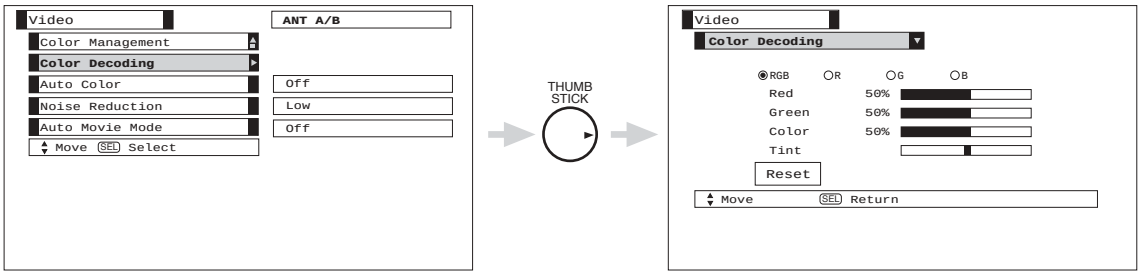

Use THUMBSTICK to highlight function.
Press down to select from 4 menu items.
Press THUMBSTICK ◀, ▶, ▼, ▲, to highlight and adjust Red, Green, Color and Tint.
Use THUMBSTICK to highlight and select "Reset" to return all settings to default.

NOTE: Color Decoding settings are independently stored in each of the 4 Color Temperature settings.

Auto Color

The Auto Color function automatically monitors and adjusts the color to maintain constant color levels even after a program or channel changes. It also maintains natural flesh tones while preserving fidelity of background colors.

NOTE: When using Component or DVI-HDTV input, Auto Color will not be available (grayed out).

Noise Reduction

The Noise Reduction function automatically reduces conspicuous noise in the picture without degrading picture quality.

Auto Movie Mode

The Auto Movie Mode function turns ON or OFF the 3:2 PULLDOWN DETECTION SPECIAL FEATURE. Theatrical movies are shot on film at 24 frames or still pictures per second, instead of 30 frames or 60 fields like video. When film is transferred to video for television viewing, the disparity between the two frame rates must be reconciled. This involves a process known as 3:2 pulldown.

When Auto Movie Mode is turned On from the Video menu, your Hitachi LCD TV will activate the circuitry for this special feature to improve video performance when watching film based sources.

NOTE:
1. When using Progressive Scan Component or DVI-HDTV input (Ex. 480p, 720p), Auto Movie Mode will not be available (grayed out).
2. All Video settings are independent of each other based on it's input (Ant A/B, Inputs 1~5).

II. FEATURES AND FUNCTIONS
4.2 CHANNEL MANAGER

Chan. Manager Select Antenna if you are using an indoor or outdoor antenna. Select Cable if you have cable TV.

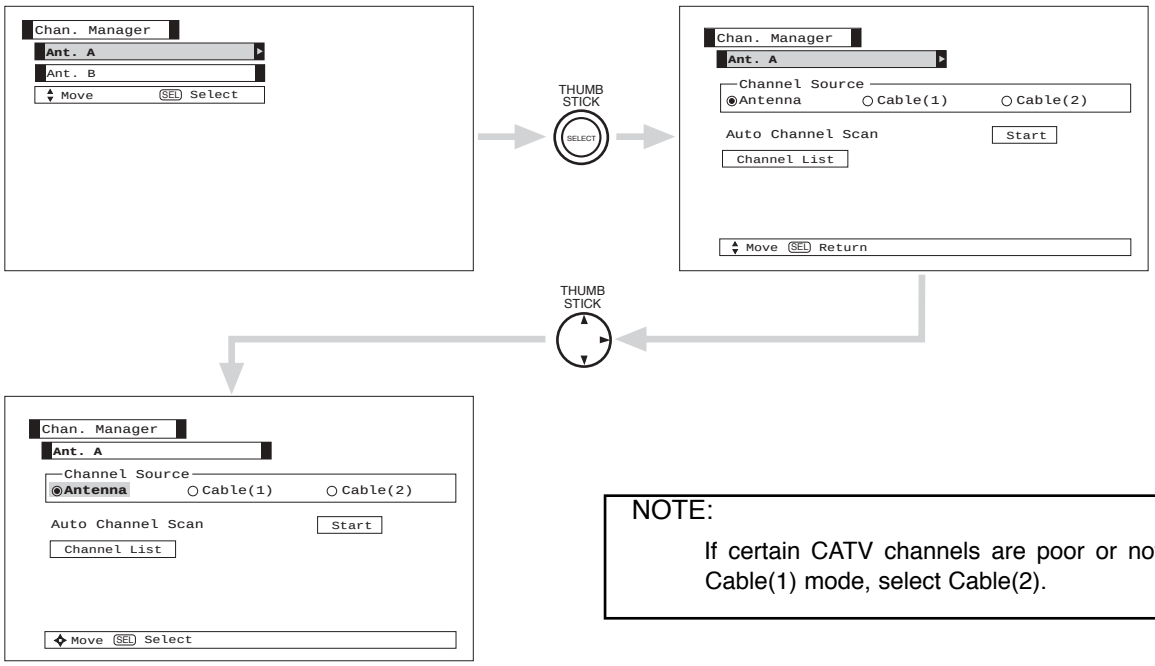

NOTE:

If certain CATV channels are poor or not possible in Cable(1) mode, select Cable(2).

Use THUMB STICK ◀ , ▶ to highlight the correct Channel Source.
Press the THUMB STICK to select highlighted source.
Press EXIT to quit the MENU.

RECEPTION BAND		
AIR	CATV 1 OR CATV 2	
	CATV CHANNEL	Indicated on the screen
VHF 2 ~ 13ch UHF 14 ~ 69ch	VHF 2~13	2 ~ 13
	Mid band A~1 A-5 ~ A-1	14 ~ 22 95 ~ 99
	Super band J~W	23 ~ 36
	Hyper band W + 1 ~ W + 28	37 ~ 64
	Ultraband W + 29 ~ W + 84	65 ~ 125

Reception channels for each mode are shown at the left.

Refer to your cable or TV guide for channel identification standards.

II. FEATURES AND FUNCTIONS
4.2 CHANNEL MANAGER (CONT.)

Auto Channel Scan

This feature will automatically store active TV channels in Auto Channel Scan. This will allow you to skip unused channels when using CHANNEL UP (▲) or DOWN (▼).

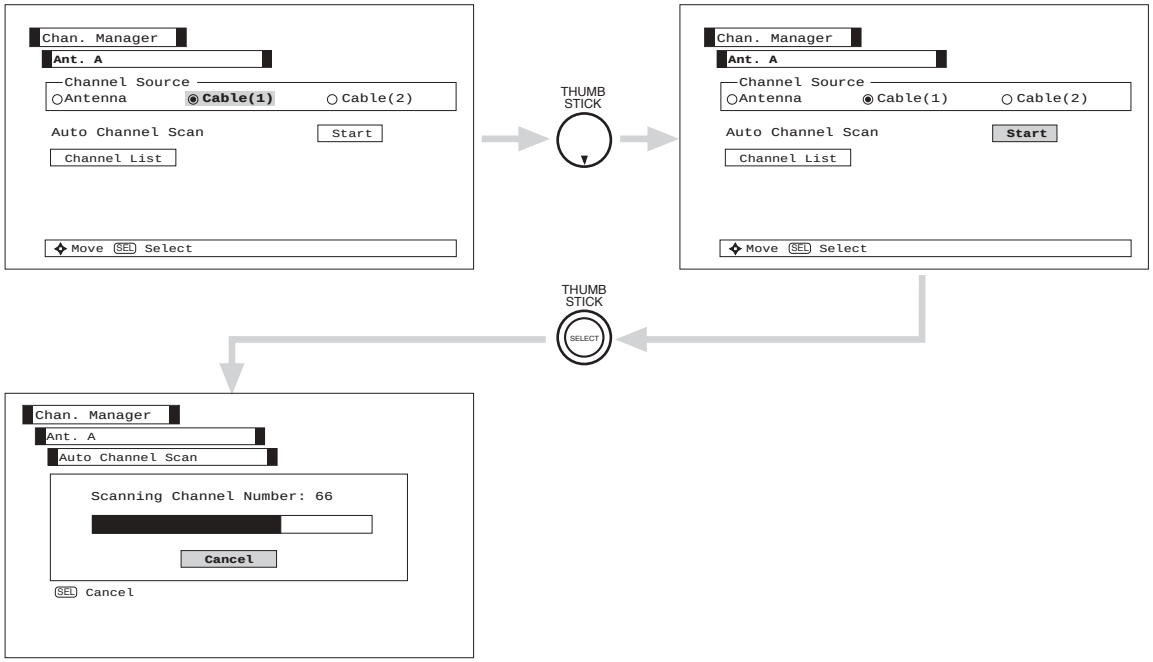

If the EXIT button is pressed while Auto Channel Scan function is engaged, programming will stop. If two antennas are connected, switch antenna inputs and repeat Auto Channel Scan for the second antenna input.

Remember to select the correct Antenna/Cable mode before using Auto Channel Scan.
See Channel Manager - Scan to add or to erase additional channels.

II. FEATURES AND FUNCTIONS
5.0 CONNECTING AV NETWORK

Your Hitachi LCD TV is equipped with an AV Network feature. This feature helps to control your external Audio/Video equipment (VCR, Set Top Box, DVD, etc.). Once this is setup, it allows your IR Mouse connector to control your equipment using your Hitachi TV Remote Control. You can use your Hitachi remote control to control the Audio/Video equipment command without the equipment's remote control.

The television rear panel has 2 IR BLASTER jacks. Each IR Mouse cable can connect up to 2 external Audio/Video components. Therefore, you can connect the television with up to four components and control them with the TV remote control. Please see the following example of an AV Network setup between your Hitachi LCD TV and external Audio/Video equipment (VCR and DVD Player).

CONNECTING EXTERNAL AUDIO/VIDEO COMPONENTS TO IR BLASTER FOR AV NETWORK

1. Connect your external Audio/Video components to the Rear Panel jacks as shown on page 27.

2. Connect the IR Mouse cable to the IR BLASTER input of the television's rear panel.

3. Place the IR mouse in front of the infrared sensor of the external components you wish to control.

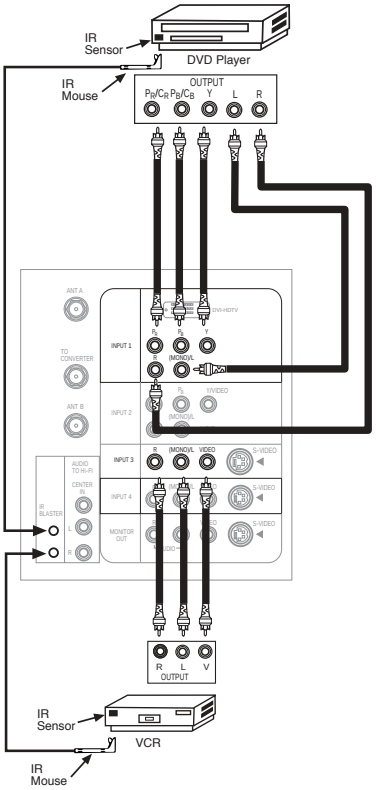

NOTES:
1. The rear panel has two IR BLASTER inputs which can control up to a total of four external components.
2. The IR Mouse must be placed in front of the external components IR sensor for the AV Network to work.
3. The correct codes must be entered for each of the Audio/Video components for the AV Network to function properly (see page 42).

4. Press the A/V NET button on the remote control. Use THUMB STICK ▲ or ▼ to highlight the component you wish to set up. Use THUMB STICK ▶ to enter component's "SOFT KEY" control button. The AV Network Setup Wizard will automatically start upon the very first use. You can access the Setup Menu Wizard again in the future by pressing the INFO button when the desired equipment is highlighted.

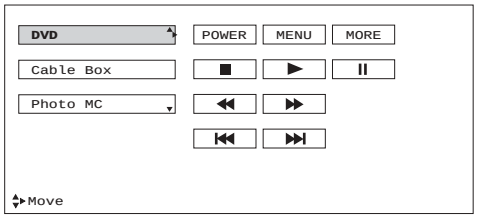

II. FEATURES AND FUNCTIONS

5.1 AV NETWORK SETUP WIZARD

5. Follow the steps below to setup your AV network (See page 42 for AV Network Codes).

There are six steps in the setup procedure (DVD setup example below).

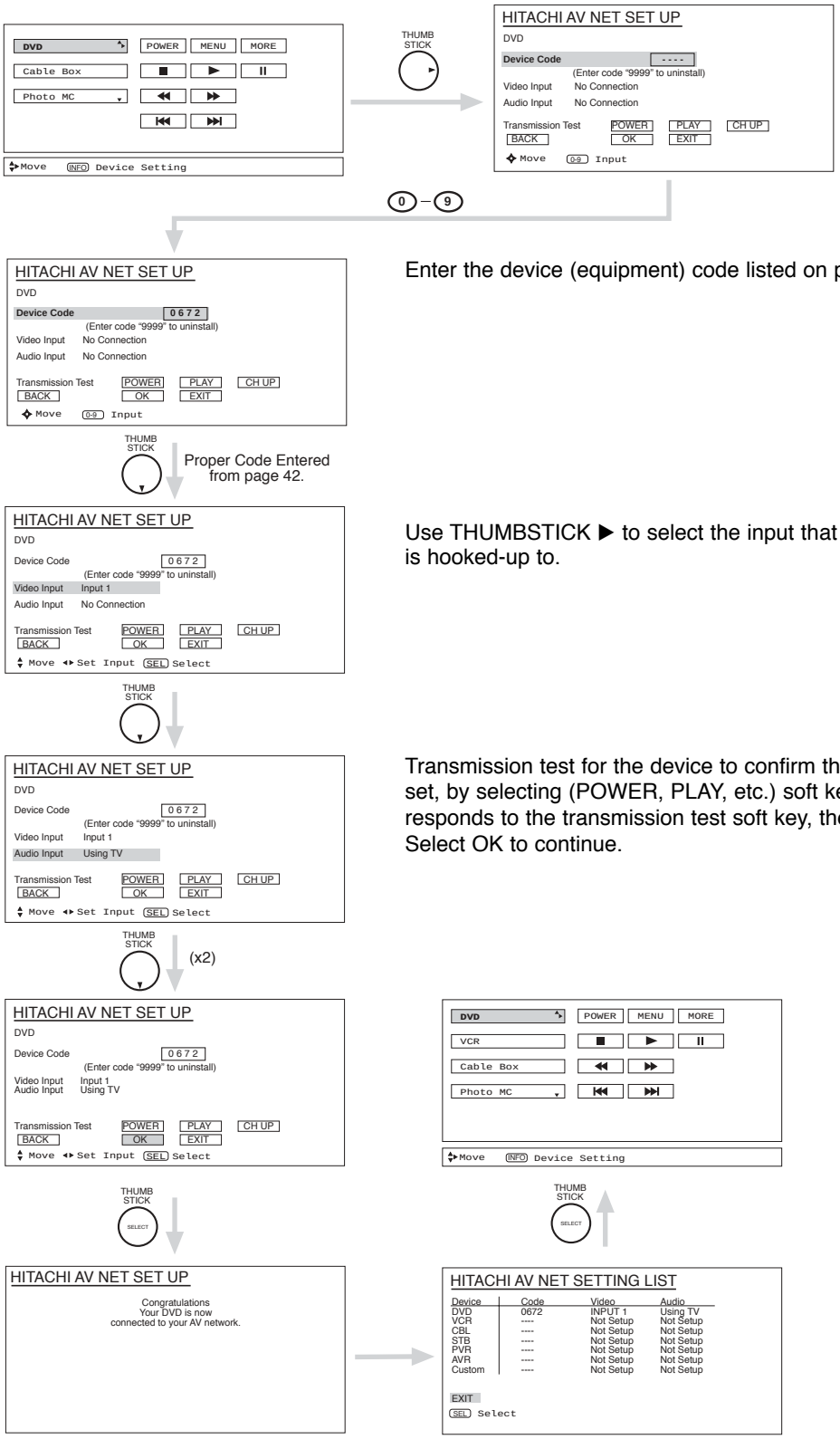

6. Enter "9999" to uninstall the equipment from your AV Network.
7. See Remote Control A/V NET button usage on page 43.

NOTES:
1. If your equipment cannot be operated after performing the above procedures, your equipment code has not been pre-coded into the AV Net.
2. In the unlikely event that your equipment receiver cannot be operated after performing the above procedures, please consult your equipment receiver operating guide. Please also try the AV Net Learning Wizard on page 47.

II. FEATURES AND FUNCTIONS
5.1 AUDIO/VIDEO NETWORK (AV NET) CODES

VCR BRAND . . . . . CODE
Admiral 0048, 0209
Adventura 0000
Aiko 0278
Aiwa 0000, 0037
Akai 0041
America Action 0278
American High 0035
Asha 0240
Audiovox 0037, 0278
Beaumark 0240
Bell & Howell 0104
Broksonic 0121, 0184, 0002, 0209,
. . . . . 0479, 1479, 0278
CCE 0072, 0278
Calix 0037
Canon 0035
Carver 0081
Cineral 0278
Citizen 0278, 0037, 1278
Colt 0072
Craig 0037, 0072, 0047, 0240
Curtis Mathes 0035, 0041, 0060, 0162, 0760, 1035
Cybernex 0240
Daewoo 0278, 1278, 0045
Denon 0042
Dynatech 0000
Electrohome 0037
Electrophonic 0037
Emerex 0032
Emerson 0184, 0002, 0209,
. . . . . 0121, 0000, 0037, 0043
Fisher 0104, 0047
Fuji 0033, 0035
Funai 0000
GE 0035, 0060, 0240, 0760, 0807, 1035, 1060
Garrard 0000
Go Video 0432
GoldStar 0037, 0038, 1237
Gradiente 0000
HI-Q 0047
Harley Davidson 0000
Harman/Kardon 0038, 0081
Harwood 0072
Hitachi 0000, 0041, 0042
Hughes Network Systems 0042
JVC 0067, 0041
Jensen 0041
KEC 0037, 0278
KLH 0072
Kenwood 0041, 0067, 0038
Kodak 0035, 0037
LXI 0037
Lloyd's 0000
Logik 0072
MEI 0035
MGA 0043, 0240
MGN Technology 0240
MTC 0000, 0240
Magnasonic 1278
Magnavox 0035, 0081, 0563,
. . . . . 0000, 0039, 0149, 1781
Magnin 0240
Marantz 0081, 0035
Marta 0037
Matsushita 0035, 0162, 0454
Memorex 0047, 0037, 0104, 0209,
. . . . . 0454,0048, 0039, 0240, 0000,
. . . . . 0479, 1037, 1162, 1237, 1262
Minolta 0042
Mitsubishi 0807, 0043, 0067
Motorola 0035, 0048
Multitech 0000, 0072
NEC 0038, 0041, 0067, 0104
Nikko 0037
Noblex 0240
Olympus 0035
Optimus 1062, 0162, 0037, 0048,
. . . . . 0104, 0432, 0454, 1048, 1162, 1262
Orion 0184, 0209, 0002, 0479, 1479
Panasonic 1062, 0035, 01625, 0225, 0454,
. . . . . 0616, 1035, 1162, 1262
Penney 0035, 0037, 0240, 0042,
. . . . . 0038, 1035, 1237
Pentax 0042
Philco 0035, 0209, 0479
Philips 0081, 0035, 0618, 1081, 1181
Pilot 0037
Pioneer 0067
Polk Audio 0081
Profitronic 0240
Proscan 0060, 0760, 1060
Protec 0072
Pulsar 0039
Quasar 0035, 0162, 0454, 1035, 1162
RCA 0060, 0240, 0042, 0149,
. . . . . 0760, 0807, 1035, 1060
Radio Shack 0000, 1037
Radix 0037
Randex 0037
Realistic 0035, 0037, 0048, 0047, 0000, 0104
ReplayTV 0614, 0616
Runco 0039
STS 0042
Samsung 0045, 0240
Sanky 0039, 0048
Sansui 0000, 0067, 0209, 0041, 0479, 1479
Sanyo 0047, 0240, 0104
Scott 0184, 0045, 0121, 0043
Sears 0035, 0037, 0047, 0000, 0042, 0104, 1237
Semp 0045
Sharp 0048, 0807, 0848
Shintom 0072
Shogun 0240
Singer 0072
Sonic Blue 0614, 0616
Sony 0035, 0032, 0000, 0033, 0636, 1032, 1232
Sylvania 0035, 0081, 0000, 0043, 1781
Symphonic 0000
TMK 0240
Tatung 0041
Teac 0000, 0041
Technics 0035, 0162
Teknika 0000, 0035, 0037
Thomas 0000
Tivo 0618, 0636
Toshiba 0045, 0043, 845
Totevision 0037, 0240
Unitech 0240
Vector 0045
Vector Research 0038
Video Concepts 0045
Videomagic 0037
Videosonic 0240
Wards 0060, 0035, 0048, 0047,
. . . . . 0081, 0240, 0000, 0042, 0072, 0149, 0760
White Westinghouse 0072, 1278, 0209
XR-1000 . . . . . 0072, 0000, 0035
Yamaha 0038
Zenith 0039, 0000, 0209, 0033,
. . . . . 0479, 1479, 0033, 0034, 0209, 0479

DVD BRAND . . . . . CODE
Aiwa 0641
Apex 0672, 0717, 0755, 0794,
. . . . . 0795, 0796, 0797, 0830
Audiologic 0736
B & K 0655, 0662
Blue Parade 0571
Brooksonic 0695
DVD2000 0521
Daewoo 0784
Denon 0490, 0634
Emerson 0591
Enterprise 0591
Fisher 0670
Funai 0490
GE 0522, 0717, 0815
GPX 0699, 0769
Go Video 0715
Gradiente 0651
Greenhill 0717
Harman/Kardon 0582, 0702
Hitachi 0490, 0573, 0664
Hiteker 0672
JBL 0702
JVC 0623, 0558, 0867
KLH 0717
Kenwood 0490, 0534, 0682
Konka 0711, 0719, 0721
Koss 0651
Lasonic 0798
Magnavox 0503, 0675
Malata 0782
Marantz 0539
Microsoft 0522
Mintek 0717
Mitsubishi 0521
Nesa 0717
Onkyo 0627, 0503
Oritron 0651
Panasonic 0490, 1362, 0632
Philips 0503, 0539, 0646, 0854
Pioneer 0525, 0571, 0632
Polk Audio 0539
Princeton 0674
Proscan 0522
RCA 0522, 0571, 1022, 0717
Samsung 0573, 0820
Sansui 0695
Sanyo 0670
Sharp 0630
Sherwood 0633
Sony 0533
Sylvania 0675
Technics 0490
Techwood 0692
Theta Digital 0571
Toshiba 0503, 0695
Urban Concepts 0503
Yamaha 0490, 0545, 0539
Zenith 0591, 0503

CABLE BRAND . . . . . CODE
ABC 0003, 0008, 0014, 0017
Americast 0899
Bell & Howel 0014
Bell South 0899
Director 0476
General Instrument 0003, 0476, 0276, 0810
GoldStar 0144
Hamlin 0009, 0273
Jerrold 0476, 0003, 0276, 0012, 0014, 0810
Memorex 0000
Motorola 0476, 1106, 0276, 0810
Pace 0237
Panasonic 0107, 0000
Philips 0305, 0317
Pioneer 0144, 0533, 0877, 1877
Pulsar 0000
Quasar 0000
Regal 0273, 0279
Runco 0000
Samsung 0144
Scientific Atlanta 0877, 0008, 0017, 0477, 1877
Sony 1006
Starcom 0003
Supercable 0276
Tocom 0012
Torx 0003
Toshiba 0000
Zenith 0000, 0525, 0899

SATELLITE BRAND (Set-Top-Box) . . . . . CODE
AlphaStar 0772
Chapparral 0215
Crossdigital 1109
DishPro 1005, 0775
Echostar 1005, 0775
Expressvu 0775
GE 0566
GOI 0775
General Instrument 0869
HTS 0775
Hitachi 0819
Hughes Network Systems 1142, 0749, 1749
JVC 0775
Magnavox 0724, 0722
Memorex 0724
Mitsubishi 0749
Motorola 0869
Next Level 0869
Panasonic 0247, 0701
Paysat 0724
Philips 1142, 0749, 0724, 1076, 0722, 1749
Proscan 0392
RCA 0392, 0566, 0855, 0143
Radioshack 0869
SKY 0856
Samsung 1109
Sony 0639
Star Choice 0869
Toshiba 0749, 0790, 1749
Uniden 0724, 0722
Zenith 0856, 1856

AMPLIFIER BRAND . . . . . CODE
Aiwa 0406
Bose 0674
Carver 0269
Curtis Mathes 0300
Denon 0160
GE 0078
Harman/Kardon 0892
JVC 0331
Left Coast 0892
Linn 0269
Luxman 0165
Magnavox 0269
Marantz 0269, 0321, 0892
NEC 0264
Nakamichi 0321
Optimus 0395, 0300
Panasonic 0308, 0521
Parasound 0246
Philips 0269, 0892
Pioneer 0013, 0300
Polk Audio 0269, 0892
RCA 0300
Realistic 0395
Sansui 0321
Shure 0264
Sony 0689, 0220
Soundesign 0078, 0211
Technics 0308, 0521
Victor 0331
Wards 0013, 0078, 0211
Yamaha 0354, 0133

RECEIVER BRAND (Amplifier) . . . . . CODE
ADC 0531
Adcom 0616
Aiwa 1089, 1405, 0121, 0158,
. . . . . 0189, 0405, 1321, 1388
Akai 0076, 0224
Alco 1390
Anam 1074, 1609
Apex Digital 1257
Arcam 1120
Audiotronic 1189
Audiovox 1390
Bose 1229
Capetronic 0531
Carver 1089, 1189, 0008, 0042, 0189, 0360
Casio 0195
Celestion 1264
Clarinette 0195
Compaq 1136
Curtis Mathes 0080
Denon 1104, 0004, 0273, 0771, 1311, 1360
Emerson 0424
Fisher 0042, 0219, 0360
GPX 1299
Garrard 0424, 0463
Glory Horse 1263
Harman/Kardon 0891, 0110, 0189
Hewlett Packard 1181
Inkel 0062
JBL 0110, 1306
JVC 0074, 1263, 1374
Kenwood 1313, 1027, 1570, 1569, 0027, 0042,
. . . . . 0077, 0186, 0313, 0314, 0569, 1051, 1052
Koss 0424, 1366
LXI 0181
Lexicon 1076
Linn 0189
Lloyd's 0195
MCS 0039, 0346
Magnavox 1089, 1189, 0128,
. . . . . 0189, 0195, 0391, 0531
Marantz 1089, 1189, 0039, 0128, 0189
Modulaire 0195
Musicmagic 1089
NAD 0320
NEC 0235
Nakamichi 0097, 0347
Onkyo 0100, 0135, 0380, 0842, 1298
Optimus 1023, 0042, 0080, 0177, 0181, 0186,
. . . . . 0219, 0531, 0670, 0738, 0801, 1074
Panasonic 1518, 0039, 0309,
. . . . . 0367, 0518, 1288, 1350
Penney 0195
Philips 1089, 1189, 1269, 0189,
. . . . . 0391, 1120, 1268, 1283
Pioneer 1023, 0014, 0080, 0150,
. . . . . 0244, 0531, 0630, 1343, 1384
Polk Audio 0189
Proscan 1254
Quasar 0039
RCA 1023, 1254, 0054, 0080, 0346, 0360,
. . . . . 0530, 0531, 1074, 1154, 1390, 1609
Radio Shack 1263
Realistic 0163, 0181, 0195
Samsung 1295
Sansui 0189, 1089, 0193, 0346
Sanyo 0219, 0801, 1251
Scott 0163, 0322
Sharp 0186
Sherwood 0062, 0491, 0502, 1653
Sony 1058, 1258, 1158, 0158,
. . . . . 0168, 0474, 1042, 1458, 1758
Soundesign 0670
Stereophonics 1023
Sunfire 1313, 0313, 0314, 1052
Teac 0463, 0163, 1074
Technics 1308, 1309, 1518,
. . . . . 0039, 0208, 0309, 0518
Thorens 1189
Victor 0074
Wards 0014, 0054, 0080, 0158, 0189
Yamaha 0176, 0186, 1176
Yorx 0195
Zenith 0857

AUDIO BRAND . . . . . CODE
Aiwa 0010, 0159
AudioSource 0351
Cambridge Soundworks 0351
Carver 0351
Fisher 0052
Fosgate 0259
Harmon/Kardon 0477
JBL 0477
JVC 0073
KLH 0351
Magnavox 0325
Nikko 0376
Paramount Pictures 0317, 0351
RCA 0056
SSI 0317
Sansui 0325
Schneider 0376
Sony 0010, 0576
Soundesign 0376
Yorx 0376

SET TOP BOX BRAND . . . . . CODE
Panasonic 1120
Pioneer 1010
Princeton 0113, 0295
Samsung 1190
Sensory Science 1126
Sharp 1010
Sony 0639

PERSONAL VIDEO RECORDER BRAND . . . . . CODE
Panasonic 0616
Philips 0618
ReplayTV 0614, 0616
SonicBlue 0614, 0616
Sony 0636
Tivo 0618, 0636

BACK TO ADJUSTMENTS

II. FEATURES AND FUNCTIONS

5.1 HOW TO USE THE AV NETWORK

A/V NET button

Press this button to access the Audio/Video network (AV Net) menu. The AV Net allows the user to control external components with the LCD Rear PTV's remote control. When you press the AV NET button, the following window will pop up within the Display Monitor screen. The window will disappear after 30 seconds if you don't press any buttons.

The AV Net Setup Wizard will automatically start upon the very first use (see page 40-41).
THUMBSTICK ▲ or ▼ to highlight the equipment you wish to control or setup and then press THUMBSTICK ▶.
Use THUMBSTICK ▲, ▼, ◀, ▶ to navigate and SELECT to select button. The command on the button is passed through the IR mouse and onto the AUDIO/VIDEO equipment. These on-screen buttons are called "Soft Keys".

Customize your Audio/Video equipment list and soft keys by selecting the "Custom" icon and following the instructions of the AV NET learning wizard (see page 47).

This window shows the available Audio/Video equipment soft keys. The equipment list will scroll up or down.

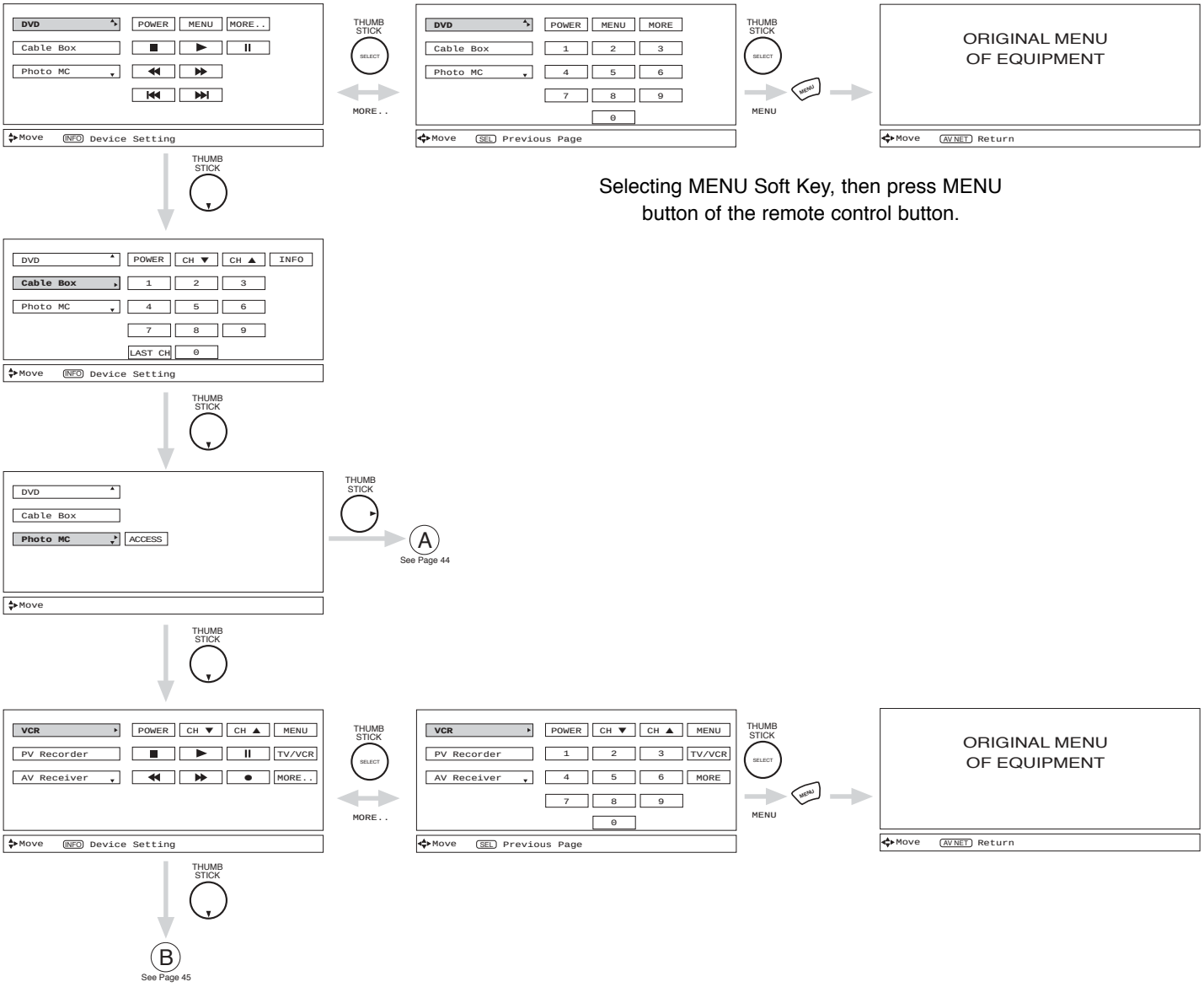

NOTE: To access the cursor function of a specific equipment (Ex. DVD, VCR), select the "MENU" soft key on OSD, and press the MENU button of the LCD Rear PTV's remote control. Then THUMBSTICK and EXIT button of the LCD Rear PTV's remote control is available to control the cursor of the equipment.

II. FEATURES AND FUNCTIONS
5.1 HOW TO USE THE AV NETWORK

Photo MC

The Photo MC feature is useful for viewing digital still pictures from your digital camera using a memory card and displaying them on the TV screen. Insert Photo MC (memory card) to be viewed to a PC Card adapter. Insert the loaded PC Card adapter to the Photo MC slot of the control panel in the front of the TV.

Press THUMBSTICK ▶ to view the digital photos in THUMBNAIL view.
Use THUMBSTICK ◀, ▶, ▲, ▼ to select individual photos.
Press SELECT to view and enlarge individual photos.
Press SELECT once again to switch enlarged photo back to THUMBNAIL view.
Press MENU to access the PHOTO MC menu.
Press THUMBSTICK ▲, ▼ to highlight menu item.
Press SELECT to choose the menu item.
Press EXIT to quit menu.

LED Light and OSD Indicator

Memory Card	Detail Information (OSD and LED)
Accessing	LED Blinking
Normal	LED always On
Card not inserted	“No Memory Card”
FAT32	“Memory Card is not available”
Not available format	“Memory Card is not available”
Abnormal	“Memory Card is not available”
No File	“No File”

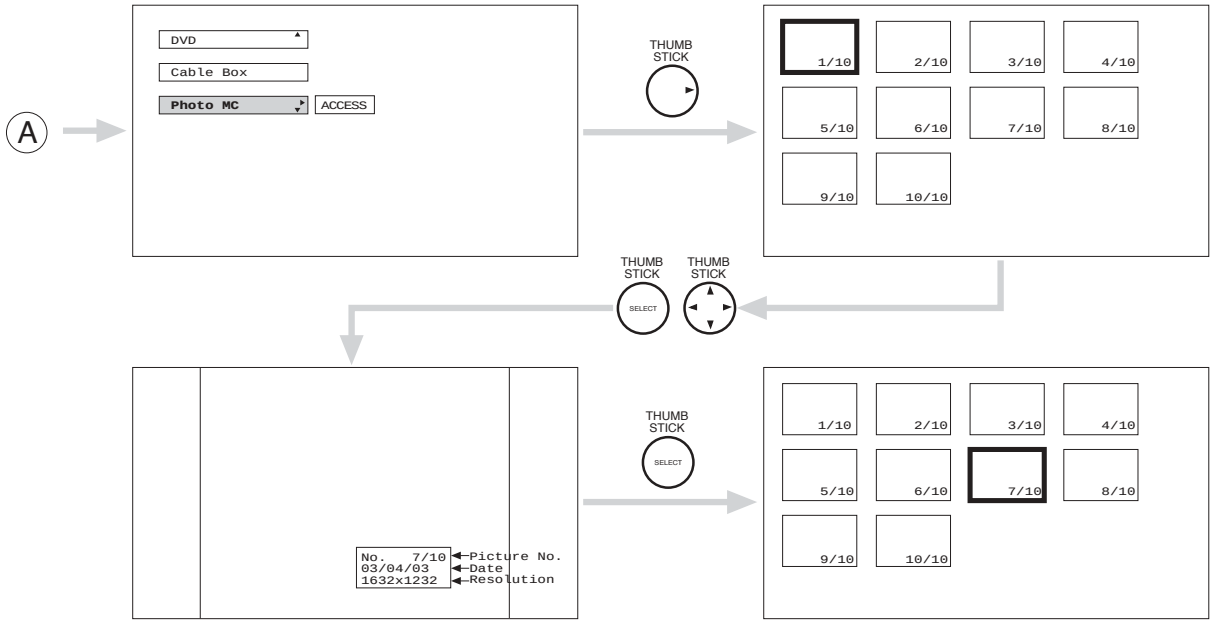

JUMP
Select this menu item to view the chosen picture number.

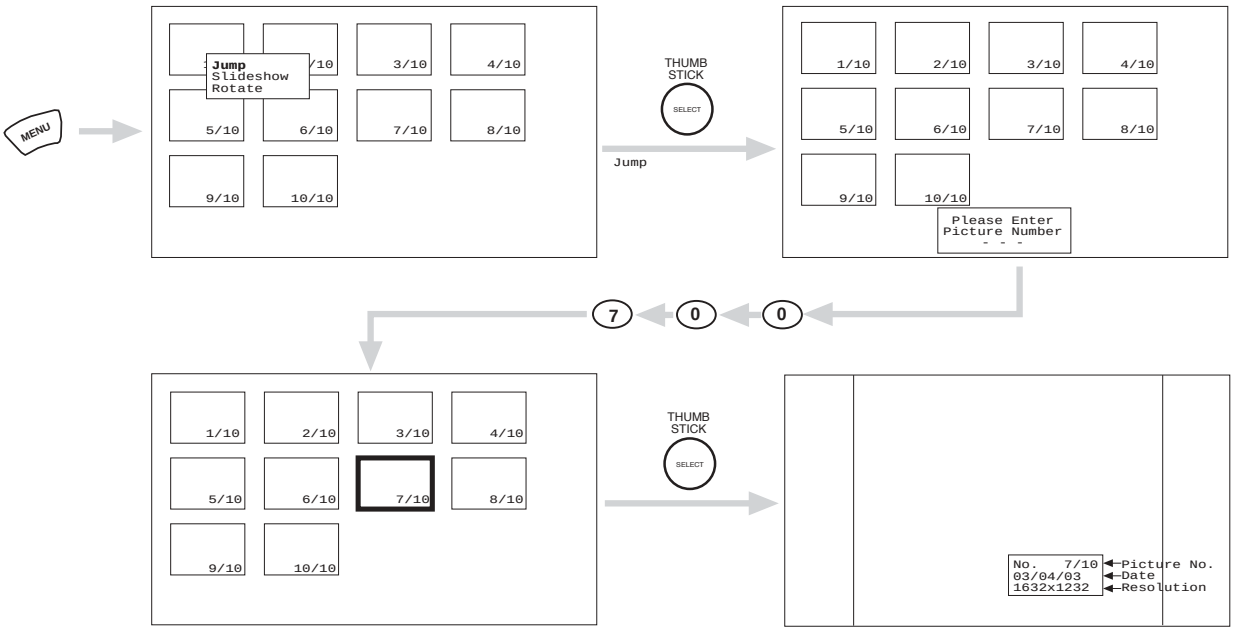

NOTE: The maximum number of digital Photos that can be displayed is 500.

5.1 HOW TO USE THE AV NETWORK

SLIDESHOW

Select this menu item to start a slideshow of the Photos in the memory card. Time interval selections can be set from 5, 10 and 30 seconds.

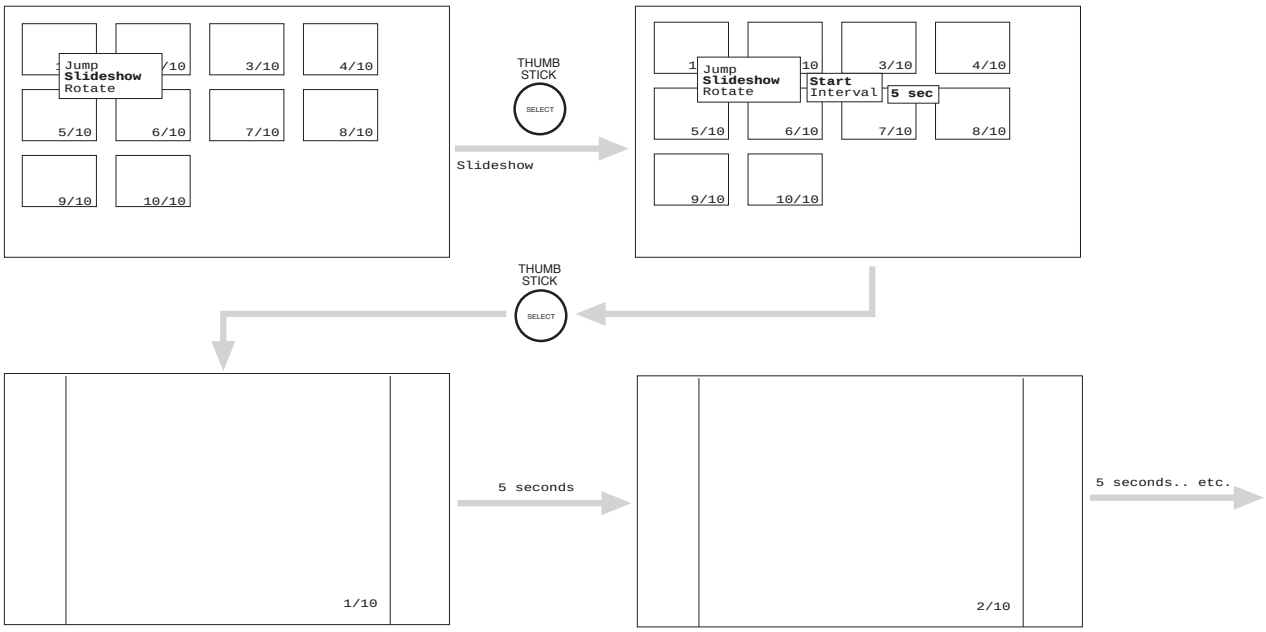

Use THUMBSTICK ▲, ▼ to highlight Slideshow item.
While interval is highlighted, press SELECT to change interval time from 5, 10 and 30 seconds. Each press will change interval time from the three mentioned choices.
Press SELECT to stop on a chosen picture of the slideshow. After 30 seconds, the slideshow will resume or press SELECT again to continue the slideshow.
Press EXIT to exit the slideshow.

ROTATE

Select this menu item to rotate selected photos either clockwise (THUMBSTICK ▶) and counterclockwise (THUMBSTICK ◀).

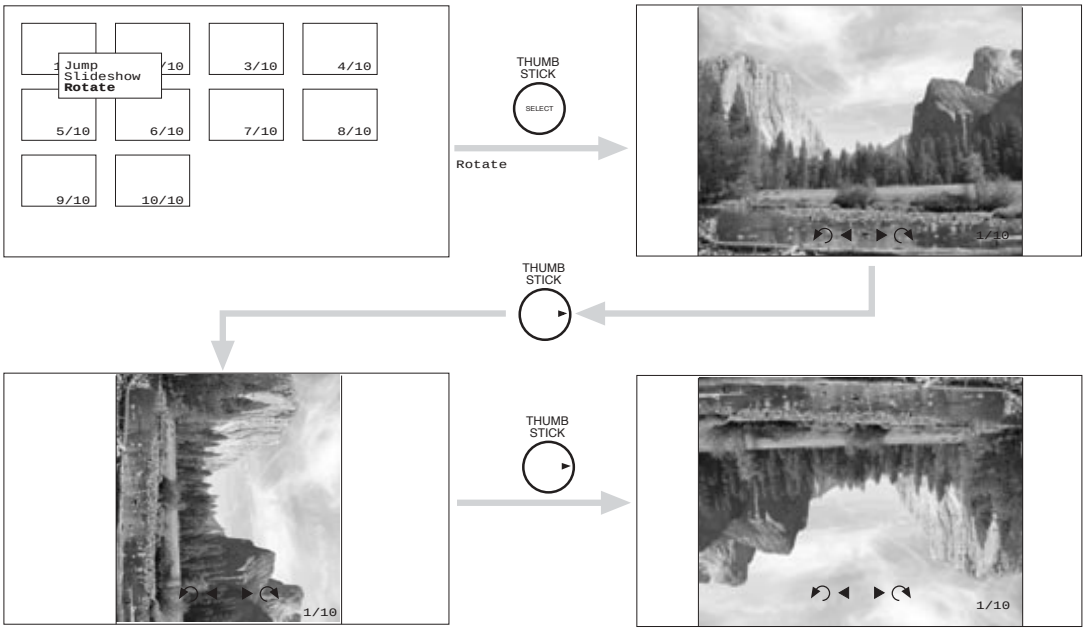

NOTES:

1. Photo file names modified on a computer should be 8 characters (Ex. ABCD1234.jpg). 1st character: letters; 2nd to 4th: letters or numbers; 5th to 8th: numbers. Photo files should be first placed on a sub directory name with 8 characters (Ex. 123ABCDE). 1st to 3rd: number; 4th to 8th: letters. The sub directory then should be placed on a main directory with a “dcim” file name format.
2. Supported image types are from VGA (640 x 480) up to UXGA (1600 x 1200); JPEG format should conform with DCF Standard (Design rule for Camera File System).
3. This TV set displays only digital pictures from digital cameras which meet DCF Standard. Pictures that were copied, edited or modified on a computer may not be displayed on the TV set.

II. FEATURES AND FUNCTIONS
5.1 HOW TO USE THE AV NETWORK

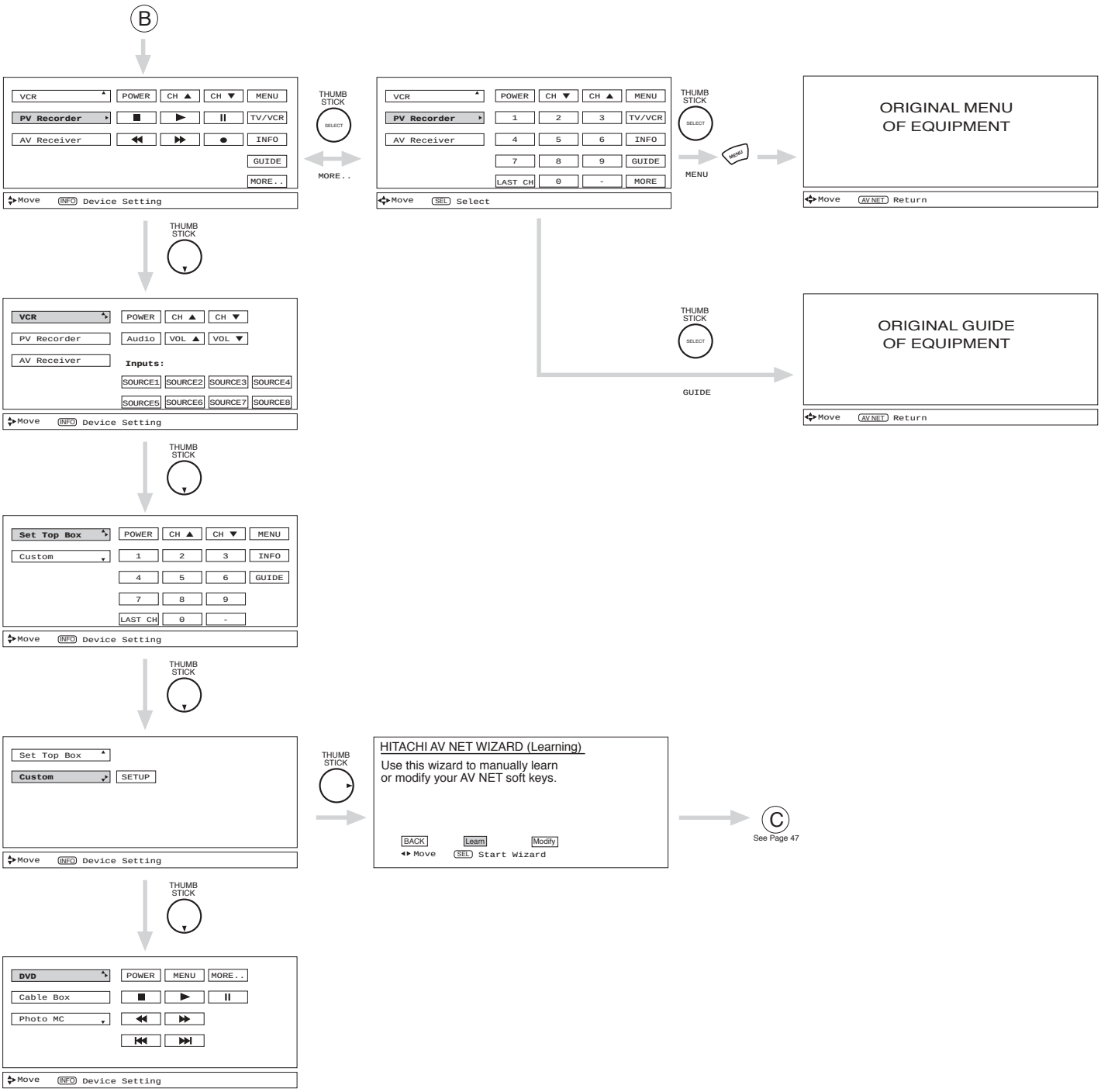

NOTE: To access the cursor function of a specific equipment (Ex. PV Recorder), select the “MENU” soft key on OSD, and press the MENU button of the LCD Rear PTV’s remote control. Then THUMBSTICK and EXIT button of the LCD Rear PTV’s remote control is available to control the cursor of the equipment.

II. FEATURES AND FUNCTIONS

5.1 HOW TO USE THE AV NETWORK

AV NET LEARNING WIZARD

This function of the AV NET makes it more expandable because it allows the user to use equipment that is not supported by the pre-code library, listed on page 42. For example, after programming your equipment to the AV NET and the soft keys do not work, the user just has to follow the steps below. The AV NET Learning Wizard will transfer any remote button IR code of your equipment to the soft keys of your AV NET. If all remote button transfers are successful, the user can now control their equipment by using the TV remote control.

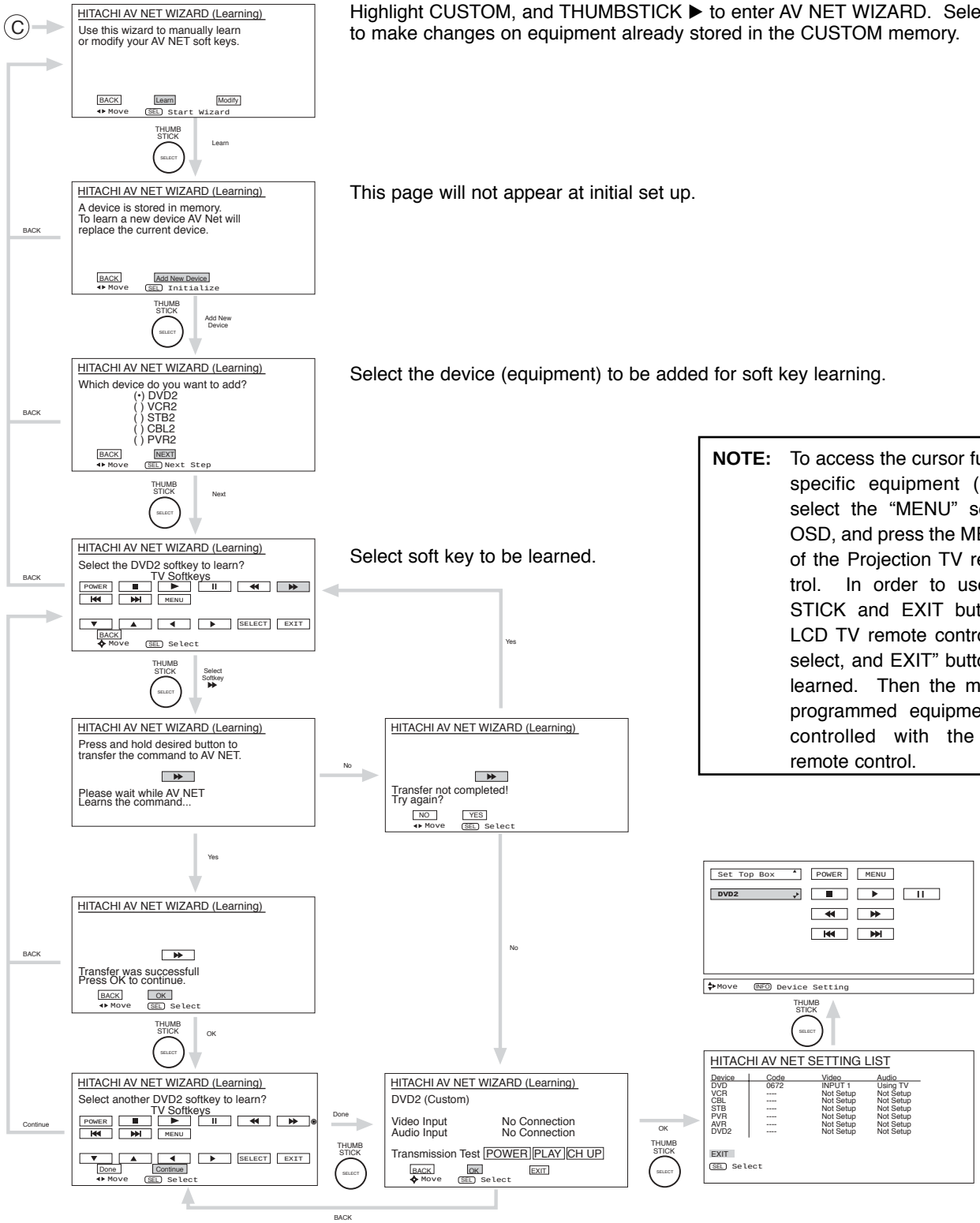

Highlight CUSTOM, and THUMBSTICK ▶ to enter AV NET WIZARD. Select MODIFY to make changes on equipment already stored in the CUSTOM memory.

This page will not appear at initial set up.

Select the device (equipment) to be added for soft key learning.

Select soft key to be learned.

NOTE: To access the cursor function of a specific equipment (Ex. DVD), select the "MENU" soft key on OSD, and press the MENU button of the Projection TV remote control. In order to use THUMBSTICK and EXIT button of the LCD TV remote control, "arrows, select, and EXIT" button must be learned. Then the menu of the programmed equipment can be controlled with the LCD TV remote control.

NOTE: It is very important to point the equipment's remote control directly to the LEARNING AV NET sensor located on the TV screen (see page 23) while trying to transfer the desired remote control button to the AV NET.

ASPECT button
Press this button to quickly change the picture format ASPECT ratio.

Depending on the input signal, the picture format ratio allows you to adjust the images through the following options.

4:3 Standard	Use this aspect mode to display conventional (4:3) images. Side panels (gray areas) are placed to the left and right of the image to preserve the original aspect ratio of the source.
4:3 Expanded	Use this aspect mode to display conventional (4:3) sources by linearly increasing image expansion from the center towards the edges of the display area in order to fill it.
4:3 Zoom1/Zoom2	Use these aspect modes to zoom in on conventional (4:3) sources.
16:9 Standard	Use this aspect mode to display 16:9 sources like HDTV and DVD's preserving the original 16:9 aspect ratio.
16:9 Zoom	Use this aspect mode to zoom 16:9 images.

(1) NTSC/480i/480p Input

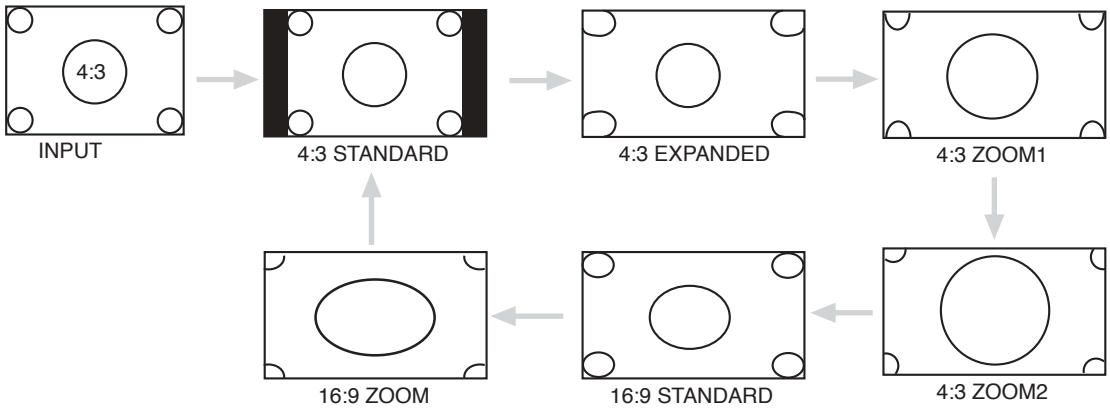

(2) 480i/480p INPUT

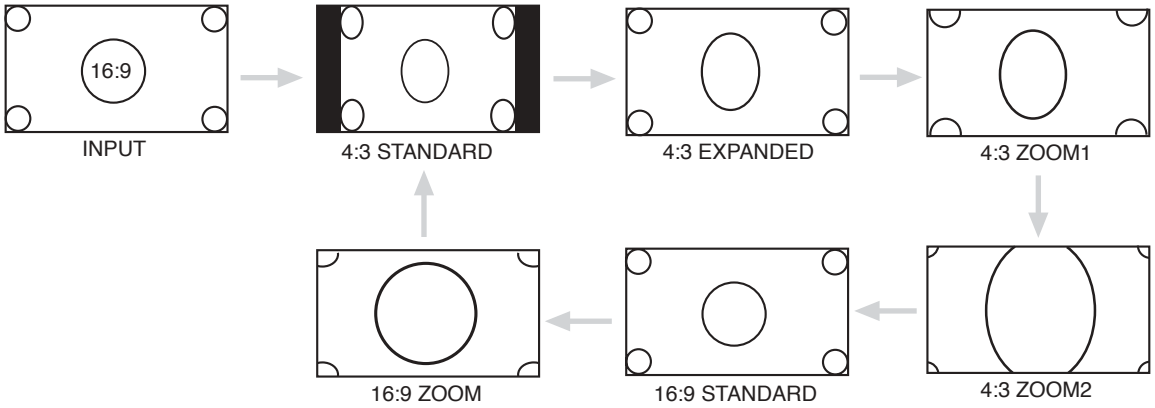

(3) 720p/1080i INPUT

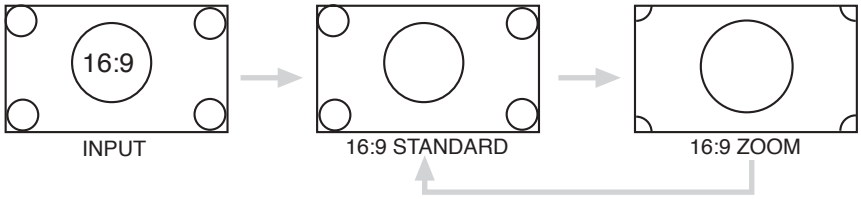

NOTE: The Aspect Style setting you select for an ANT input will automatically be set for the other ANT inputs. However, all five video inputs have independent Aspect Style settings.

III. ASSEMBLED P.W.B. ADJUSTMENT

1.0 Memory Initialization

Adjustment Procedure

(1) Enter I²C mode from the front panel by pressing and holding the INPUT and the POWER button for two seconds, then release.
Note: When entering the I²C menu mode, make sure to wait about two minutes after power off. If entering the I²C menu mode immediately after power off, the I²C menu page will appear but remote control operation will not work.

(2) Receive signal on the main picture. (NTSC, SDTV or HDTV).
Some menu pages have I²C adjustments for SDTV and HDTV. The set will automatically allow you to set these items only when a SDTV or HDTV signal is input to the COMPONENT jacks on the back of the TV.

(3) Check the OSD according to table on page 61~87, using ▲,▼ buttons on the Remote Control to scroll down and cursor right (▶) and hold for two seconds to enter the selected device.

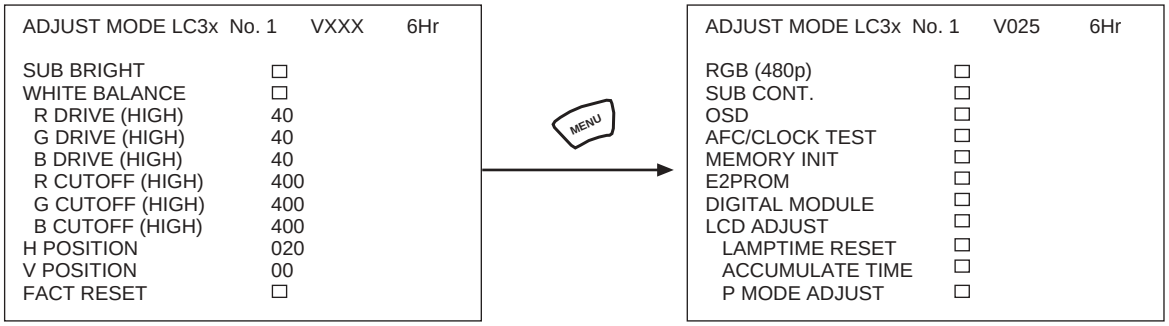

(4) Press the EXIT button to exit I²C ADJUST mode.

(5) Press the EXIT button button again to EXIT the I²C menu.

III. ASSEMBLED P.W.B. ADJUSTMENT

2. FACTORY PRESET (1)

(1) Cursor right (▶) to select factory reset (Fact Reset) of the OSD and check that the set returns to delivery settings (CH 03) (see page 88-91).

(2) Do not unplug the set until this operation is completed and do not perform any key operation either, after this operation each setting is reset delivery settings automatically.

MEMORY INITIALIZE and FACTORY PRESET

ITEM	MEMORY INITIALIZE	FACTORY RESET	REMARKS
SUB BRIGHT ADJUST DATA BRIGHTNESS DATA	NOT INITIALIZE	NOT INITIALIZE	
WHITE BALANCE ADJUST DATA G DRV and others	NOT INITIALIZE	NOT INITIALIZE	
H POSITION ADJUST DATA	INITIALIZE	NOT INITIALIZE	
VD POSITION ADJUST DATA	INITIALIZE	NOT INITIALIZE	
SUB CONTRAST ADJUST DATA	INITIALIZE	NOT INITIALIZE	See Page 56
GHOST ADJUSTMENT	INITIALIZE	NOT INITIALIZE	See Page 57
V.COM (FLICKER) ADJUSTMENT	INITIALIZE	NOT INITIALIZE	See Page 57
NRSH (VERTICAL LINE) ADJUSTMENT	INITIALIZE	NOT INITIALIZE	See Page 57
OSD POSITION SETTING DATA	NOT INITIALIZE	NOT INITIALIZE	
SETTING DATA FOR EACH DEVICE	NOT INITIALIZE	NOT INITIALIZE	
BBE EFFECT SETTING DATA	NOT INITIALIZE	NOT INITIALIZE	
AUDIO AGC SETTING DATA	NOT INITIALIZE	NOT INITIALIZE	
V CHIP RATING SETTING DATA	NOT INITIALIZE	NOT INITIALIZE	
CCD SETTING DATA	NOT INITIALIZE	NOT INITIALIZE	
FACTORY RESET ITEM	INITIALIZE	INITIALIZE	
LAMP TIME	INITIALIZE	NOT INITIALIZE	
ACCUMULATION TIME	INITIALIZE	NOT INITIALIZE	

NOTE: (1) If there is a different value than shown in table on page 61-87, for fixed data, adjust it using ◀,▶ buttons (only in this case).

(2) When exchanging microprocessor and TV is turned on for first time, it requires initialization of Memory Initial of I^2C. Enter to I^2C Adjustment mode and reset Memory Initialize.

III. ASSEMBLED P.W.B. ADJUSTMENT

3.0 RASTER POSITION ADJUSTMENT

3.1 Mechanical raster position adjustment

3.1.1 GEOMETRY SPECIFICATION

VALUE SHOWN IN THE TABLE BELOW OR LESS

ITEM		SYMBOL	VALUE
TRAPEZOIDAL DISTORTION	VERTICAL LINE	A,B	3
TILT	VERTICAL LINE	J	
TRAPEZOIDAL DISTORTION	HORIZONTAL LINE	C,D	3
TILT	HORIZONTAL LINE	K	
EDGE LINE POSITION	VERTICAL	E-F	6
	HORIZONTAL	G-H	6

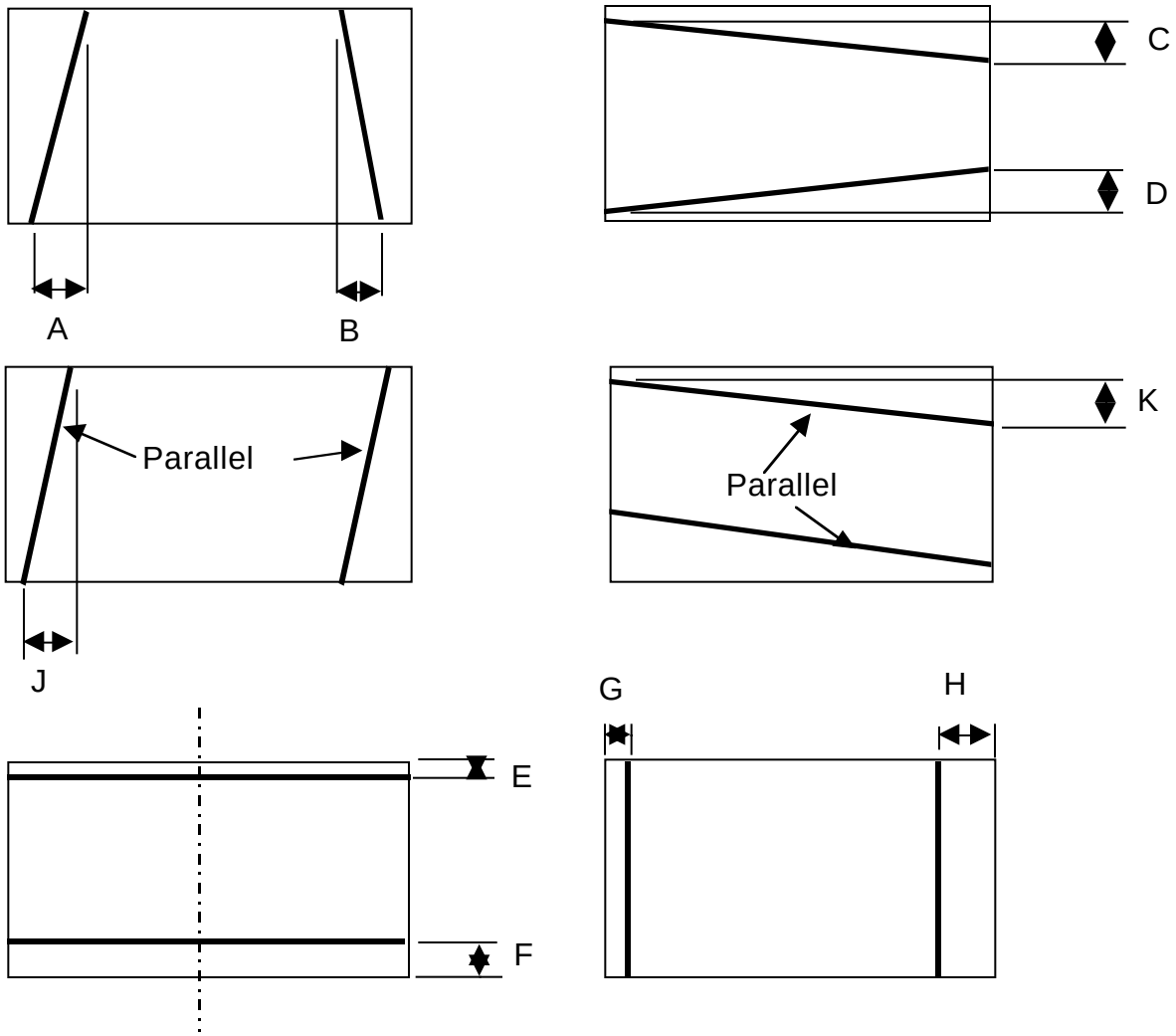

CONDITION

(1)RECEIVE THE HITACHI CIRCLE PATTERN SIGNAL.
(2)BRIGHTNESS/CONTRAST------STANDARD CONDITION
CONTRAST: MAX
OTHER PARAMETERS: CENTER POSITION

III. ASSEMBLED P.W.B. ADJUSTMENT

3.1.2 ADJUSTMENT MECHANISM

Raster position should be adjusted by using 6 axis adjustment table.

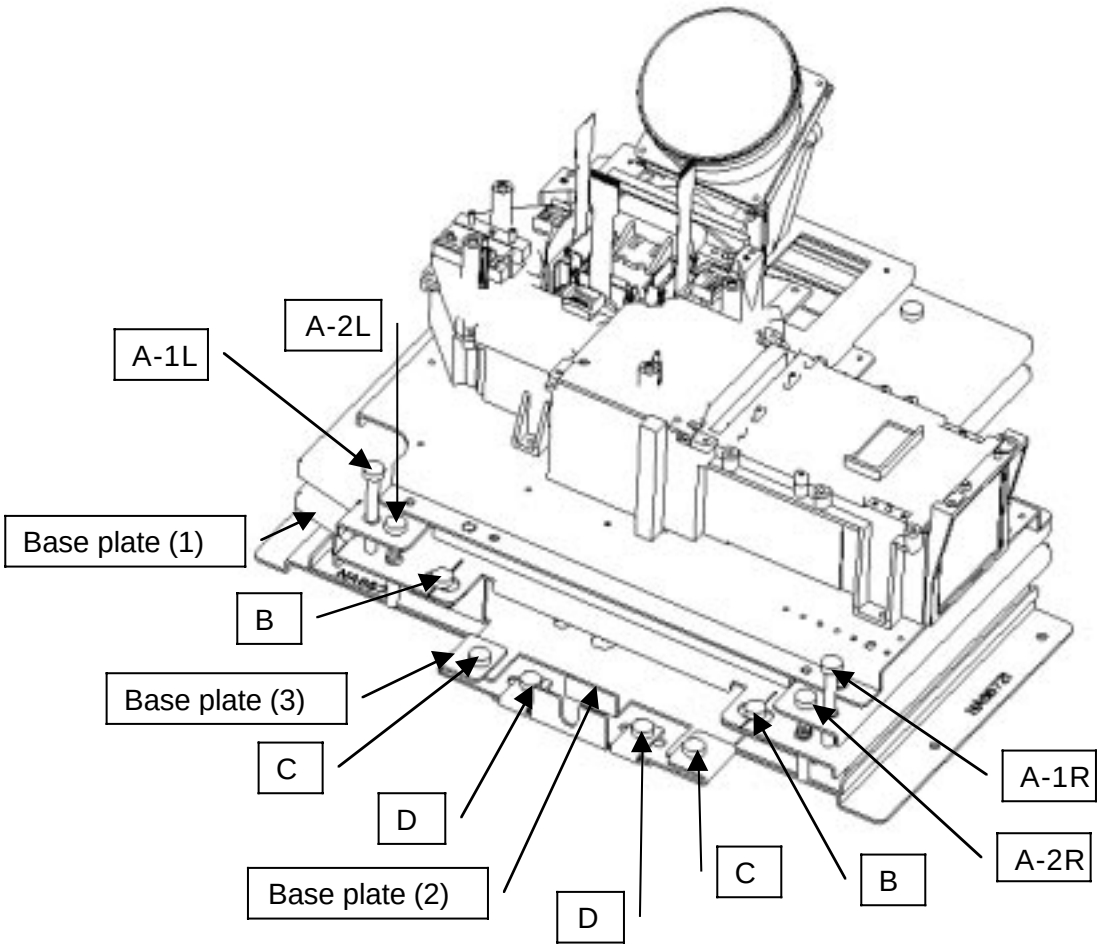

A-1; FIXING SCREW FOR TRAPEZOID DISTORTION
A-2; ADJUSTMENT SCREW FOR TRAPEZOID DISTORTION
B ; FIXING SCREW FOR TILT
C ; FIXING SCREW FOR VERTICAL RASTER POSITION
D ; FIXING SCREW FOR HORIZONTAL RASTER POSITION

III. ASSEMBLED P.W.B. ADJUSTMENT

3.1.3 FLOW CHART FOR ADJUSTMENT

(1) CONFIRM TRAPEZOID.
(2) IF OUT OF SPEC, ADJUST TRAPEZOID REFER TO 3.1.4 (1) TRAPEZOID DISTORTION.
(3) CONFIRM TILT.
(4) IF OUT OF SPEC, ADJUST TILT REFER TO 3.1.4 (2) TILT.
(5) CONFIRM VERTICAL POSITION.
(6) IF OUT OF SPEC, ADJUST VERTICAL POSITION REFER TO 3.1.4 (3) VERTICAL POSITION.
(7) WHEN STILL OUT OF SPEC, ADJUST VERTICAL POSITION BY I^2C MENU.
(8) CONFIRM HORIZONTAL POSITION.
(9) IF OUT OF SPEC, ADJUST HORIZONTAL POSITION REFER TO 3.1.4 (4) HORIZONTAL POSITION.
(10) WHEN STILL OUT OF SPEC, ADJUST HORIZONTAL POSITION BY I^2C MENU.

3.1.4 ADJUSTMENT METHOD

(1)TRAPEZOIDAL DISTORTION OF HORIZONTAL DIRECTION
SELECT (X) OR (Y) ACCORDING TO HORIZONTAL RASTER SHAPE.
(X)

(A)HEIGHER

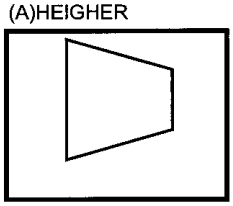

(a)LOOSEN NUT AND SCREW A-1-R
AND NUT OF SCREW A-2-R.
(b)ROTATE SCREW A-2-R.
(c)CHECK DISTORTION REFER TO SPEC.
(d)TIGHTEN NUT OF SCREW A-2-R.
(e)TIGHTEN SCREW AND NUT OF A-1-R.

(B)LOWER

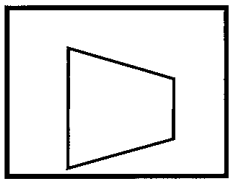

(a)LOOSEN NUT AND SCREW A-1-L.
AND NUT OF SCREW A-2-L.
(b)ROTATE SCREW A-2-L.
(c)CHECK DISTORTION REFER TO SPEC.
(d)TIGHTEN NUT OF SCREW A-2-L.
(e)TIGHTEN SCREW AND NUT OF A-1-L.

(Y)

(A)HEIGHER

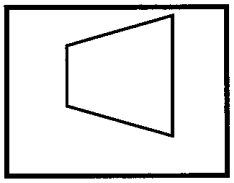

(a)LOOSEN NUT AND SCREW A-1-L
AND NUT OF SCREW A-2-L.
(b)ROTATE SCREW A-2-L.
(c)CHECK DISTORTION REFER TO SPEC.
(d)TIGHTEN NUT OF SCREW A-2-L.
(e)TIGHTEN SCREW AND NUT OF A-1-L.

(B)LOWER

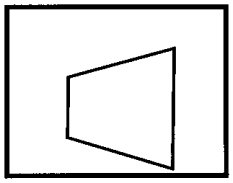

(a)LOOSEN NUT AND SCREW A-1-R.
AND NUT OF SCREW A-2-R.
(b)ROTATE SCREW A-2-R.
(c)CHECK DISTORTION REFER TO SPEC.
(d)TIGHTEN NUT OF SCREW A-2-R.
(e)TIGHTEN SCREW AND NUT OF A-1-R.

(2)TILT

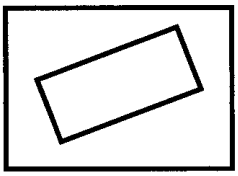

(a)LOOSEN SCREW B (2 pcs).
(b)ROTATE BASE PLATE (1) BY HAND.
(c)CHECK TILT REFER TO SPEC.
(d)TIGHTEN SCREW B (2 pcs).

(3) TRAPEZOIDAL DISTORTION OF VERTICAL DIRECTION

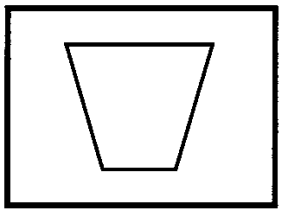

(a) LOOSEN SCREW AND NUT OF A-1-L AND R.
(b) LOOSEN NUT OF A-2-L AND R.
(c) ROTATE SCREW OF A-2-L AND R AT SAME ANGLE.
WHEN WIDTH AT LOWER END IS NARROW, ROTATE SCREWS AT C.W.
WHEN WIDTH AT LOWER END IS WIDE, ROTATE SCREWS AT C.C.W.
(d) TIGHTEN NUT OF A-2-L AND R.
(e) TIGHTEN SCREW AND NUT OF A-1-L AND R.
(f) CHECK VERTICAL TRAPEZOIDAL DISTORTION REFER TO SPEC.

(4)VERTICAL POSITION

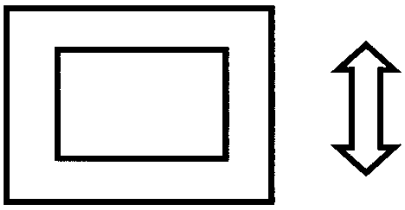

(a)LOOSEN SCREW C.
(b)MOVE BASE PLATE (2) TOWARD FRONT OR BACK.
(c)TIGHTEN SCREW C.
(d)CHECK VERTICAL POSITION REFER TO SPEC.

(5)HORIZONTAL POSITION

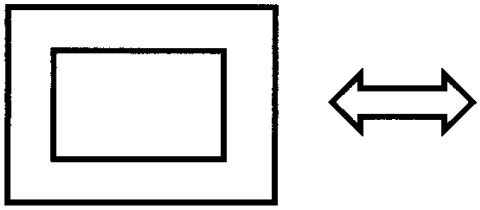

(a)LOOSEN SCREW D.
(b)MOVE BASE PLATE (3) TOWARD LEFT OR RIGHT.
(c)TIGHTEN SCREW D.
(d)CHECK HORIZONTAL POSITION REFER TO SPEC.

3.2 Electrical picture position adjustment

Note: If horizontal or vertical position can not be adjusted within the specification by mechanical raster position alignment, adjust position by I^2C menu.

(1) Enter 'H POSITION' service menu and adjust horizontal picture position by using the cursor on the remote contorl.
(2) Enter 'V POSITION' service menu and adjust vertical picture position by using the cursor on the remote control.

III. ASSEMBLED P.W.B. ADJUSTMENT

4.0 DISPLAY AREA SPECIFICATIONS

16:9standard

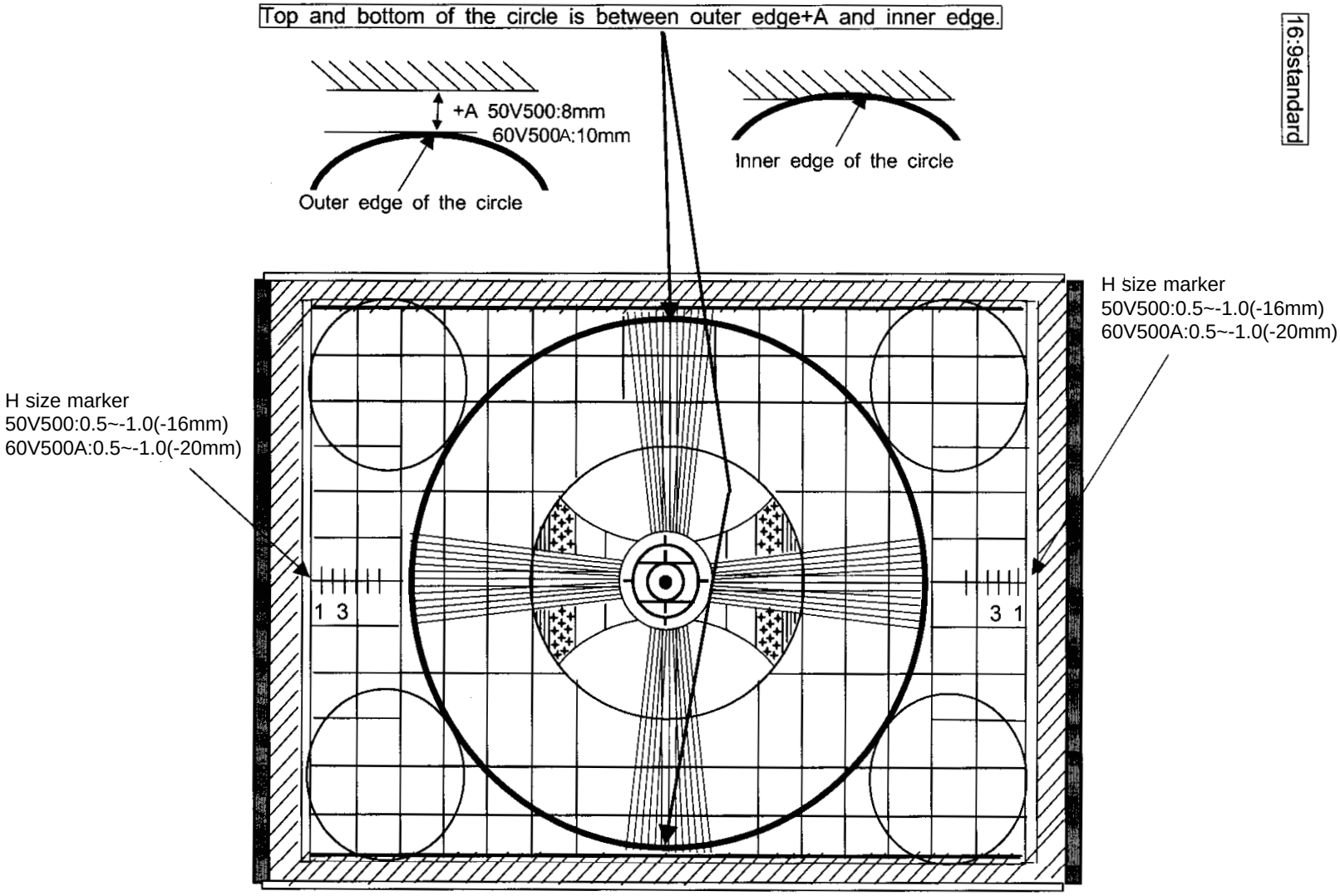

BACK TO ADJUSTMENTS

III. ASSEMBLED P.W.B. ADJUSTMENT

5.0 Amplitude Adjustment

5.1 RGB Amplitude Adjustment

Preparation for adjustment

(1) Recall user menu and select 'Video' _ 'Picture Mode' _ 'Day' _ 'Reset'.
(2) Input 525p(480p) of RGB amplitude adj. signal into INPUT1 (Component) input.

Adjustment procedure

(1) Receive 525p(480p) signal (ASPECT 16:9 Standard).
(2) Select 'RGB (480P)' from Service Adj. Menu.
(3) Press and hold the "▶" cursor on the remote for 2 seconds or more to perform automatic adjustment.
(4) Wait until 'Auto Adjusting' OSD is disappeared.

Sample of 'ADJUST MODE' Menu

ADJUST MODE LC3x No. 1 V025 6Hr

RGB (480p) ☐
SUB CONT. ☐
OSD ☐
AFC/CLOCK TEST ☐
MEMORY INIT ☐
E2PROM ☐
DIGITAL MODULE ☐
LCD ADJUST ☐
LAMPTIME RESET ☐
ACCUMULATE TIME ☐
P MODE ADJUST ☐

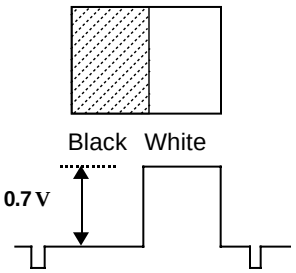

-Remarks
RGB amplitude adj. signal

6.0 Sub-contrast adjustment

-Preparation
(1) Receive Sub-contrast adjustment signal.(Fig.1)(*1)

-Adjustment
(1) Select 'SUB CONTRAST' of Service Adj. Menu.
(2) Press "▶" for over 2 secondsto perform automatic adjustment. When it's completed, 'Auto Adjusting' on the screen will be disappeared.

Fig.1

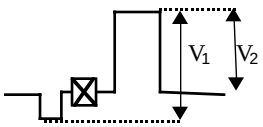

(RF Input)
V_1=1.0 Vp-p (when V_2=100IRE)

III. ASSEMBLED P.W.B. ADJUSTMENT

7.0 GHOST ADJUSTMENT

	ADJUST ITEMS	ADJ. PROCEDURE	
1	ADJ.SIGNAL	Internal signal from IC(Black window pattern with 50% raster signal)	
2	GHOST ADJUSTMENT	**ADJUST MODE →LCD ADJUST →GHOST** First , reduce the "SHP" pressing left button ◀ of the remote until ghost appears at the left hand side of the window pattern. Next, increase the "SHP" pressing right button ▶ of handset until ghost disappears. Then, increase 3 steps. 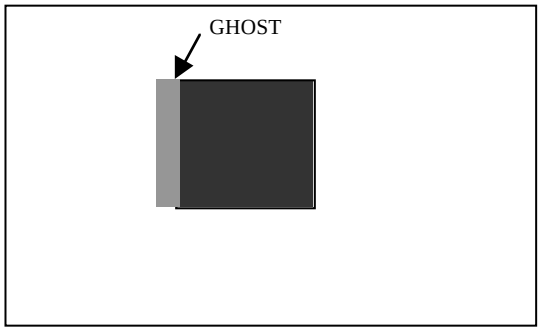 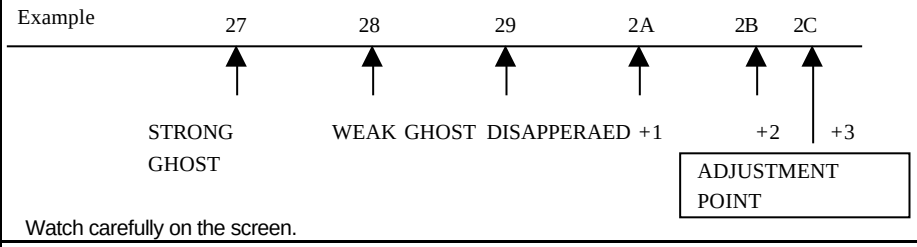 Watch carefully on the screen.	
3	RED GHOST ADJUSTMENT	Check for no ghost on the window pattern. If there is, decrease the ghost by cursor left (◀) or corsor right (▶) of the remote control.	
4	GREEN GHOST ADJUSTMENT	Press "SELECT" key and adjust same procedure as RED GHOST.	
5	BLUE GHOST ADJUSTMENT	Press "SELECT" key and adjust same procedure as GREEN GHOST.	

8.0 V.COM (FLICKER) ADJUSTMENT

	ADJUSTMENT ITEMS	ADJUSTMENT PROCEDURE	
0	PREPARATION	This adjustment should be done after GHOST ADJUSTMENT.	
1	SIGNAL	Internal signal from IC (50% raster signal with one dot black lines)	
2	Red FLICKER ADJUSTMENT	**SELECT : ADJUST MODE →LCD ADJUST →V.COM with handset.** You should reduce the flicker by pressing left or right button of handset. The adjustment point is the weakest FLICKER position.	
3	GREEN FLICKER ADJUSTMENT	Press "SELECT" key, then the internal signal will be changed from red to green. Same procedure should be done for GREEN flicker adjustment.	
4	BLUE FLICKER ADJUSTMENT	Press "SELECT" key, then the internal signal will be changed from green to blue.Same procedure should be done for GREEN flicker adjustment.	

9.0 NRSH (VERTICAL LINE) ADJUSTMENT

	ADJUSTMENT ITMS	ADJUSTMENT PROCEDURE	
0	PREPARATION	Flicker adjustment should be finished.	
1	SIGNAL	Internal signal from IC(Grey pattern)	
2	NRSH ADJUSTMENT	**SELECT :ADJUST MODE →LCD ADJUST →NRSH by using handset.** The screen is divided in 9 areas. Initially, the upper left area is selected. Check that no black or white vertical stripes are observed on the screen. If 12 dots interval stripes exist, select area by using the cursor stick on handset (▲/▼ direction) and adjust NRSH by using the stick (◀/▶).	

III. ASSEMBLED P.W.B. ADJUSTMENT

10.0 GAMMA Correction (White Balance)

GAMMA data (white balance) should not be adjusted. This data are adjusted by the factory and MEMORY INITialize cannot erase these data. If and only if the customer request to change the GAMMA correction, follow the instruction below.

(1) Heat run for 10 minutes or more after power on.
(2) The white signal is generated from the internal IC. The white signal level and the luminance level is shown on the next page (table 10.0).
(3) Change only the step that are requested to change.

For customer request, it is possible to adjust RGB signal amplitude (means adjust the gamma correction curve) each signal level (No.1_No.32).
If customer require to change the white balance of LCD PTV, we should re-adjust gamma correction curve.

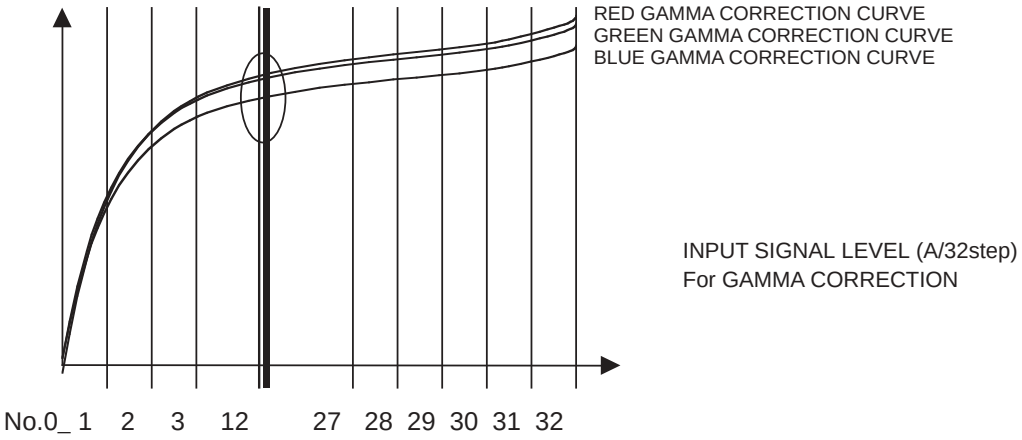

1. ADJUSTMENT PROCEDURE for SERVICE
   Input signal level(luminance level) is divided into 32(No.0_No.32).

FOR EXAMPLE,
If customer require to change the white balance of 12th level of white to reddish, increase the red value and adjust the white balance of 12th signal level (see below).

I2C MENU
LCDADJ>GAMMA>No.12

```
LCD ADJUST
 GAM No.12
R        126->increase this data
G        138
B        105
```

Remark: The gamma data for higher intensity should always be bigger than that of lower intensity. If not, noise may appear on the screen.

example:

	GAM No11		GAM No12		GAM No13	
R	120	>	119	<	127	NG
R	120	<	128	>	127	NG
R	120	≤	125	≤	127	OK

GAM No12 Red Adjustable Range 120~127

STORE THE DATA TO TV SET
LCD ADJ>G/C WRITE_press for several second
After this procedure, this new data will be write back to E2PROM. It takes about 20 seconds (picture will be black out).

III. ASSEMBLED P.W.B. ADJUSTMENT

11.0 Color Uniformity (White Uniformity)

COLOR UNIFORMITY data should not be adjusted. This data are adjusted by the factory and MEMORY INITialize cannot erase these data. If and only if the customer request to change the color uniformity, follow the instruction below.

(1) Heat run for 10 minutes or more after power on.
The four white signals generated from the internal IC

(3) Change only the step that are requested to change.

1	2	3	4	5
6	7	8	9	10
11	12	13	14	15
16	17	18	19	20
21	22	23	24	25

The screen is divided in 25 spaces. It can adjust for 4 different luminance levels. These data is linearly interpolated on screen.

1. COLOR UNIFORMITY ADJUSTMENT PROCEDURE
Adjustable luminance level is divided in 4 (MIN (8%), MIDL (20%), MIDH (55%), and HMAX (82%)).

FOR EXAMPLE
If a customer complains about the color uniformity at position 5 on the screen (luminance level; MIDH), increase the BLUE (or GREEN or RED) value and adjust the color uniformity of position 5.

I2C MENU
LCDADJ>C.UNIF (MIDH)>POINT No.5

LCD ADJUST
POINT No.5
R 00 ->increase this data
G 00 ->increase this data
B F7 ->increase this data

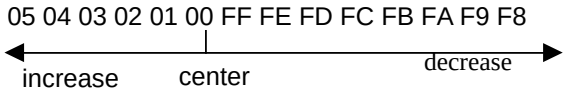

STORE THE DATA TO TV SET
LCD ADJ>G/C WRITE - press for 2- 3 second
After this procedure, this new data will be written back to E2PROM. It takes about 20 seconds.

III. ASSEMBLED P.W.B. ADJUSTMENT

12.0 DOOR PROTECTION OPERATION CHECK

Adjustment procedure

(1) Remove Lamp cover and turn the set on.
(2) Check that the lamp dose not light, and “Lamp indicator" is flash red.
(3) Turn the set off and attach Lamp cover again

13.0 LAMP HOLDER PROTECTION OPERATION CHECK

Adjustment procedure

(1)Remove Lamp holder and turn the set on.(attach Lamp cover)
(2)Check that the lamp dose not light, and “Lamp indicator" is flash red.
(3)Turn the set off and attach Lamp holder again

14.0 HIGH TEMPERATURE PROTECTION OPERATION CHECK

Adjustment procedure

(1)Remove EPF2 connector while the set is on.
(2)Check that the lamp is turned off and “Temp indicator" is flash red.
(3)Turn the set off and attach EPF2 again.
(4)Remove EPF3 connector while the set is on.
(5)Check that the lamp is turned off and “Temp indicator" is flash red.
(6)Turn the set off and attach EPF3 again.
(7) Turn the set on and connect Jig (Shown below) between temperature sensor terminals on optical engine.
(8)Check that the lamp is turned off and “Temp indicator" is flash red.
(9)Turn the set off and remove Jig.

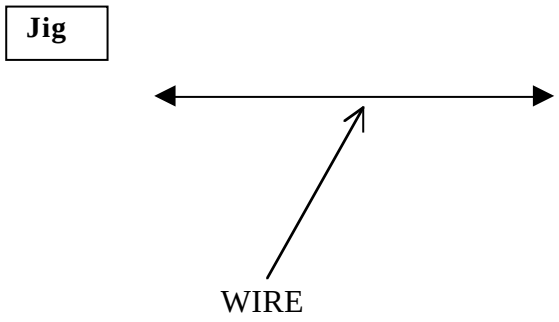

III. ASSEMBLED P.W.B. ADJUSTMENT

Table 1. I²C Parameter List

1st Page

Adjustment Mode OSD	Adjustment Item		Address	Adjustment Range (HEX)	Initial Data (HEX)	Adjustment Value (HEX)
FC4						
SUB BRIGHT	Brightness		07H D15~D8	00.~FF	80	
White Balance Mode (Controlled by sub mi-com)						
R DRIVE (HIGH) R DRIVE (MED) R DRIVE (STD) R DRIVE (B/W)	R~SUB~GAIN (CXD3536) 00: 0~ FF: 3.98473 (255/64) Medium and Standard data are the offset from High data Data (M) = High + Medium - 7Fh Data (S) = High + Standard - 7Fh Data (B) = High + B/W - 7F	High	0CH D07~D0	00~FF	40 *	
		Medium	0FH D07~D0	00~FF	7F *	
		Standard	12H D07~D0	00~FF	7F *	
		Black/White	15H D07~D0	00~FF	7F *	
G DRIVE (HIGH) G DRIVE (MED) G DRIVE (STD) G DRIVE (B/W)	G~SUB~GAIN (CXD3536) 00: 0~ FF: 3.98473 (255/64) Medium and Standard data are the offset from High data Data (M) = High + Medium – 7Fh Data (S) = High + Standard – 7Fh Data (B) = High + B/W - 7F	High	0DH D07~D0	00~FF	40 *	
		Medium	10H D07~D0	00~FF	79 *	
		Standard	13H D07~D0	00~FF	77 *	
		Black/White	16H D07~D0	00~FF	75 *	
B DRIVE (HIGH) B DRIVE (MED) B DRIVE (STD) B DRIVE (B/W)	B~SUB~GAIN (CXD3536) 00: 0~ FF: 3.98473 (255/64) Medium and Standard data are the offset from High data Data (M) = High + Medium – 7Fh Data (S) = High + Standard – 7Fh Data (B) = High + B/W - 7F	High	0EH D07~D0	00~FF	40 *	
		Medium	11H D07~D0	00~FF	73 *	
		Standard	14H D07~D0	00~FF	6F *	
		Black/White	17H D07~D0	00~FF	6A *	
R CUTOFF (HIGH) R CUTOFF (MED) R CUTOFF (STD) R CUTOFF (B/W)	R~SUB~BRT (CXD3536) 000: -1023~ 7FF: 1023 steps Medium and Standard data are the offset from High data Data (M) = High + Medium - Data (S) = High + Standard - 400h Data (B) = High + B/W - 400h	High	0CH D18~D8	000~7FF	400 *	
		Medium	0FH D18~D8	000~7FF	400 *	
		Standard	12H D18~D8	000~7FF	400 *	
		Black/White	15H D18~D8	000~7FF	400 *	
G CUTOFF (HIGH) G CUTOFF (MED) G CUTOFF (STD) G CUTOFF (B/W)	G~SUB~BRT (CXD3536) 000: -1023~ 3FF: 1023 step Medium and Standard data are the offset from High data Data (M) = High + Medium – 400h Data (S) = High + Standard – 400h Data (B) = High + B/W – 400h	High	0DH D18~D8	000~7FF	400 *	
		Medium	10H D18~D8	000~7FF	400 *	
		Standard	13H D18~D8	000~7FF	400 *	
		Black/White	16H D18~D8	000~7FF	400 *	
B CUTOFF (HIGH) B CUTOFF (MED) B CUTOFF (STD) B CUTOFF (B/W)	B~SUB~BRT (CXD3536) 000: -1023~ 3FF: 1023 step Medium and Standard data are the offset from High data Data (M) = High + Medium – 400h Data (S) = High + Standard – 400h Data (B) = High + B/W – 400h	High	0EH D18~D8	000~7FF	400 *	
		Medium	11H D18~D8	000~7FF	400 *	
		Standard	14H D18~D8	000~7FF	400 *	
		Black/White	17H D18~D8	000~7FF	400 *	

*: Stored in EEPROM for sub mi-com (fixed data)

III. ASSEMBLED P.W.B. ADJUSTMENT

Table 1. I²C Parameter List

1st Page

Adjustment Mode OSD	Adjustment Item	Address	Adjustment Range (HEX)	Initial Data (HEX)	Adjustment Value (HEX)
(Controlled by sub mi-com)					
HP (CXD3536)		18H D18~D8	000~7FF	027 *	
VP (CXD3536)		18H D7~D0	00~FF	05 *	
FACTORY RESET					

2nd Page

Adjustment Mode OSD	Adjustment Item	Address	Adjustment Range (HEX)	Initial Data (HEX)	Adjustment Value (HEX)
TA1383-Sub (DAH)					
SUB-CONT	Sub Contrast Control 00: MIN (-3dB), 1F: MAX (+3dB)	05H D7~D3	00~1F	0F	
OSD					
H POSI	OSD Horizontal Position	_	00~FF	0F	
V POSI	OSD Vertical Position	_	00~FF	22	
CLK1	OSD Clock Adjust	_	3B~4F	3F	
CLK2	CLK1, 2, 3, 4 data	_	3B~4F	3F	
CLK3	CLK1, CLK2, CLK3 CLK4 are independent.	_	3B~4F	26	
CLK4	Refer to "Adjust Mode Spec.	_	3B~4F	33	
BM H	OSD Horizontal Position (Bridge Media)	_	00~FF	58	
BM V	OSD Vertical Position (Bridge Media)	_	00~FF	1E	
AFC/CLOCK TEST				OFF	
MEMORY INITIAL					
I2C OPEN				OFF	
IR BLASTER					
DIGITAL MODULE					
FC4					
RGB	FLA~ON	04H D14	0~1	0	
Sub mi-com					
LCD ADJUST	See Table "LCD ADJUST Mode"				

Device Page: Sync Frequency Detection

Adjustment Mode OSD	Adjustment Item	Address	Adjustment Range (HEX)	Initial Data (HEX)	Adjustment Value (HEX)
Sync Frequency Detection					
HFRQ-N	The number of times of Sync Frequency	_	00~0F	03	

Input1/Input2 YPBPR/DVI Horizontal Frequency Detection Select

Adjustment Mode OSD	Adjustment Item	Address	Adjustment Range (HEX)	Initial Data (HEX)	Adjustment Value (HEX)
Input1/Input2 YPBPR Horizontal Frequency Detection Select					
INPUT1	Input1 YPBPR Horizontal Frequency Detection Select 00: Auto, 01: 480i, 02: 480p, 03: 720p, 04: 1080i	_	00~04	00	
INPUT2	Input2 YPBPR Horizontal Frequency Detection Select 00: Auto, 01: 480i, 02: 480p, 03: 720p, 04: 1080i	_	00~04	00	

III. ASSEMBLED P.W.B. ADJUSTMENT

Table 1. I²C Parameter List

CCD/V CHIP/VIDEO ID

Adjustment Mode OSD	Adjustment Item	Address	Adjustment Range (HEX)	Initial Data (HEX)	Adjustment Value (HEX)
V CHIP/ CCD					
SAMPRING	V Chip Adjust Refer to “V Chip Spec.	_	00~FF	00	
POLLING		_	00~FF	0F	
START		_	01~07	02	
TIMEOUT		_	05~1E	05	
STATUS		_	01~07	02	
CLK POS	Adjust CCD Clock Position HDTV only		00~1F	0A	
VIDEO ID	VIDEO ID Detection Remark: VIDEO ID DATA detected by main mi-com	_	00~02	*	

IR BLASTER

Adjustment Mode OSD	Adjustment Item	Address	Adjustment Range (HEX)	Initial Data (HEX)	Adjustment Value (HEX)
IR BLASTER					
WAIT	IR Blaster Adjustment Refer to “IR Blaster.doc” for Detail Spec.	_	_	03 *	
REPEAT		_	_	20 *	

ISF Mode

Adjustment Mode OSD	Adjustment Item	Address	Adjustment Range (HEX)	Initial Data (HEX)	Adjustment Value (HEX)
ISF Mode: Reserved					
Reserved	Reserved				

III. ASSEMBLED P.W.B. ADJUSTMENT

Table 1. I²C Parameter List

Device Page:LCD DRIVE

Adjustment Mode OSD	Adjustment Item	Address	Adjustment Range (HEX)	Initial Data (HEX)	Adjustment Value (HEX)
LCD DRIVE (Sub mi-com)					
SIG-C-R	SIG-C-R (CXA7005-Red/01h/D5-D0) 00:SIG-C voltage 6.5V~3Fh: 8.7V	05H D21~D16	00~3F	1Dh *	
SIG-C-G	SIG-C-R (CXA7005-Green/01h/D5-D0) 00:SIG-C voltage 6.5V~3Fh: 8.7V	05H D13~D08	00~3F	1Dh *	
SIG-C-B	SIG-C-R (CXA7005-Blue/01h/D5-D0) 00:SIG-C voltage 6.5V~3Fh: 8.7V	05H D05~D00	00~3F	1Dh *	
BRT-R 0	Bright-control-R (CXA7005-Red/03h/D7-D0) 00: SIG~C ±0.2V~FFh: SIG~C ±1V	06h D15-D08	00~FF	00h *	
GAIN-R 0	GAIN-R (CXA7005-Red/02h/D7-D0) 00:SIG~C ±2V~FFh:SIG~C ±5.5V	06H D07-D00	00~FF	BCh *	
BRT-G 0	Bright-control-R (CXA7005-Green/03h/D7-D0) 00: SIG~C ±0.2V~FFh: SIG~C ±1V	07h D15-D08	00~FF	00h *	
GAIN-G 0	GAIN-R (CXA7005-Green/02h/D7-D0) 00:SIG~C ±2V~FFh:SIG~C ±5.5V	07H D07-D00	00~FF	BCh *	
BRT-B 0	Bright-control-R (CXA7005- Blue /03h/D7-D0) 00: SIG~C ±0.2V~FFh: SIG~C±1V	08h D15-D08	00~FF	00h *	
GAIN-B 0	GAIN-R (CXA7005-Blue/02h/D7-D0) 00:SIG~C ±2V~FFh:SIG~C 5.5V	08H D07-D00	00~FF	BCh *	
SIDA-R 0	SIDA-R (CXA7005-Red/05h/D6-D0) 00: SIG~C ±5.5V~7Fh: SIG~C ±0.1V	0AH D22-D16	00~7F	00h *	
SIDA-G 0	SIDA-G (CXA7005-Green/05h/D6-D0) 00: SIG~C ±5.5V~7Fh: SIG~C ±0.1V	0AH D14-D08	00~7F	00h *	
SIDA-B 0	SIDA-B (CXA7005-Blue/05h/D6-D0) 00: SIG~C ±5.5V~7Fh: SIG~C ±0.1V	0AH D06-D00	00~7F	00h *	
SIDB-R 0	SIDB-R (CXA7005-Red/06h/D6-D0) 00: SIG~C ±5.5V~7Fh: SIG~C ±0.1V	0BH D22-D16	00~7F	56h *	
SIDB-G 0	SIDB-G (CXA7005-Green/06h/D6-D0) 00: SIG~C ±5.5V~7Fh: SIG~C±0.1V	0BH D14-D08	00~7F	56h *	
SIDB-B 0	SIDB-B (CXA7005-Blue/06h/D6-D0) 00: SIG~C ±5.5V~7Fh: SIG~C ±0.1V	0BH D06-D00	00~7F	56h *	
USR-BRT	USR-BRT (CXD3536/2004h/D4-D0) (CXD3536/2005h/D7-D2) 000: -1024 step~7FF: +1023 step	19h D10-D00	00~7FF	400h *	
R-GC-LI	R-GC-LIM (CXD3536/203Ah/D3-D0) (CXD3536/203Ch/D7-D2) 000~3FF	1Dh D17-D08	00~3FF	000h *	
G-GC-LI	G-GC-LIM (CXD3536/203Ah/D7-D4) (CXD3536/203Dh/D7-D2) 000~3FF	1Eh D17-D08	00~3FF	000h *	
B-GC-LI	B-GC-LIM (CXD3536/203Bh/D3-D0) (CXD3536/203Eh/D7-D2) 000~3FF	1Fh D17-D08	00~3FF	000h *	
VS-GDA1	VS-GDAT1 (CXD3536/303Ah/D7-D0) 00: 0~FF: 3.98	23h D15-D08	00~FF	40h *	
VS-GDA2	VS-GDAT2 (CXD3536/303Bh/D7-D0) 00: 0~FF: 3.98	23h D07-D00	00~FF	40h *	
VS-GDA3	VS-GDAT3 (CXD3536/30CBh/D7-D0) 00: 0~FF: 3.98	24h D07-D00	00~FF	40h *	
R-GBRT	R-GAM-BRT (CXD3536/202Eh/D4-D0) (CXD3536/202Fh/D7-D2)	1AH D18-D8	00~7FF	400 *	
G-GBRT	G-GAM-BRT (CXD3536/2030h/D4-D0) (CXD3536/2031h/D7-D2)	1BH D18-D8	00~7FF	400 *	
B-GBRT	B-GAM-BRT (CXD3536/2032h/D4-D0) (CXD3536/2033h/D7-D2)	1CH D18-D8	00~7FF	400 *	
R-GGAIN	R-GAM-GAIN (CXD3536/202Bh/D4-D0)	1AH D7-D0	00~FF	80 *	
G-GGAIN	G-GAM-GAIN (CXD3536/202Ch/D4-D0)	1BH D7-D0	00~FF	80 *	
B-GGAIN	B-GAM-GAIN (CXD3536/202Dh/D4-D0)	1CH D7-D0	00~FF	80 *	
TEST PAT	PG register (CXD3536/F000h, etc.)	04H D13-D08	00~3F	00	

III. ASSEMBLED P.W.B. ADJUSTMENT

Table 1. I²C Parameter List

Device Page: UPD64084

Adjustment Mode OSD	Adjustment Item		Address	Adjustment Range (HEX)	Initial Data (HEX)	Adjustment Value (HEX)
UPD64084 (B9H) Read Mode						
SYNCDET	Sync Detection 0: Sync, 1: No Sync		00H D3	00~01	*	
F-STD	Frame Sync Nonstandard Detection 0: Standard, 1: Non standard		00H D2	00~01	*	
V-STD	Vertical Sync Nonstandard Detection 0: Standard, 1: Non standard		00H D1	00~01	*	
H-STD	Horizontal Sync Nonstandard Detection 0: Standard, 1: Non standard		00H D0	00~01	*	
NOISE	Noise Level Detection 00: Noise Small ~ FF: Noise Large		01H D7~D0	00~FF	*	
VID-ID	Video ID Detection 0: 4:3 signal or no information, 1: 16:9 screen signal 2: 4:3 letter box signal		04H D5~D4	00~03	*	
UPD64084 (B8H) Write Mode						
DYGA	Y Motion Detection Gain 0: Gain 0 ~ F: Gain MAX		04H D3~D0	00~0F	09	
DCGA	Chroma Motion Detection Gain 0: Gain 0 ~ F: Gain MAX		05H D3~D0	00~0F	06	
VAPGA	Vertical Aperture Control Gain: for Day Mode 0: Correction OFF ~ 7: Correction MAX (x0.875) Night Mode is fixed to “0”		0AH D7~D5	00~07	05	
VAPIN	Vertical Aperture Control Invert 0: Correction OFF ~ 1F: Correction MAX (x0.875)		0AH D4~D0	00~1F	03	
YPFG	Y Peaking Filter Gain Control 0: -1.0 ~ 8: 0.0 ~ F: +0.875		0BH D3~D0	00~0F	08	
YHC1	Y Output High Frequency Coring 0: Coring OFF, 1: Coring Small, 2: Coring Center, 3: Coring Large	TV	10H D7~D6	00~03	00	
YHC1-NR		TV-NR			02	
YHC2		NTSC			00	
YHC2-NR		NTSC-NR			02	

Device Page: TA1383

Adjustment Mode OSD	Adjustment Item	Address	Adjustment Range (HEX)	Initial Data (HEX)	Adjustment Value (HEX)
TA1383-Main (D9H) Read Mode					
HSYNC-M	Horizontal Sync Number	1 D7~D0	00~FF	*	
VSYNC-M	Vertical Sync Number	0 D6~D0	00~7F	*	
CSYNC-M	SYNC Mode Detection 0: 2 Level Sync, 1: 3 Level Sync	0 D7	00~01	*	
TA1383F-Sub (DBH) Read Mode					
HSYNC-S	Horizontal Sync Number	1 D7~D0	00~FF	*	
VSYNC-S	Vertical Sync Number	0 D6~D0	00~7F	*	
CSYNC-S	SYNC Mode Detection 0: 2 Level Sync, 1: 3 Level Sync	0 D7	00~01	*	

III. ASSEMBLED P.W.B. ADJUSTMENT

Table 1. I²C Parameter List

Device Page: TA1383

Adjustment Mode OSD	Adjustment Item		Address	Adjustment Range (HEX)	Initial Data (HEX)	Adjustment Value (HEX)
TA1383-Main/Sub (D8H/DAH) Write Mode						
CONTM1	Contrast Control 00: MIN (-3dB) 1F: MAX (+3dB)	Main TA1383 ANT A, B	05H D7~D3	00~1F	10	
CONTS1		Sub TA1383 ANT A			10	
CONT-2		NTSC			10	
CONT-K		ANT C/YPBPR/DVD/BM			10	
CONT-A		DVI			08	
CLRM1	Color Control 00: MIN (-3dB) 1F: MAX (+3dB)	Main ANT A, B	06H D7~D3	00~1F	10	
CLRS1		Sub ANT A			10	
CLR-2		NTSC			10	
CLR-K		ANT C/YPBPR/DVD/BM			10	
CLR-A		DVI			08	
TINTM1	Tint Control 0: MIN (-7deg) F: MAX (+7deg)	Main ANT A, B	07H D7~D4	0F	08	
TINTS1		Sub ANT A			08	
TINT-2		NTSC			08	
TINT-K		ANT C/YPBPR/DVD/BM			08	
TINT-A		DVI			08	
BANDW-F	Band Width Filter Switch 0: OFF, 1: 11.3MHz 2: 16MHz, 3: Mute	ANTA, B/NTSC/480i	03H D4~D3	00~03	01	
BANDW-5		480p			02	
BANDW-6		720p			00	
BANDW-7		1080i (includes Bypass)			00	
BANDW-9		BM(540p)			00	
BANDW-C		SPLIT			01	
YDL1-F	Y Delay Time Adjust 1 Base Band Section 0: -10 ns, 1: 0 ns 2: +10 ns, 3: +20 ns	ANTA, B/NTSC/480i	07H D3~D2	03	01	
YDL1-5		480p			01	
YDL1-6		720p			01	
YDL1-7		1080i (includes Bypass)			01	
YDL1-9		BM (540p)			01	
YDL1-C		SPLIT			01	
YDL2-0	Y Delay Time Adjust 2 NTSC Section 0: OFF, 1: +40 ns 2: +80 ns, 3: +120 ns	ALL	07H D1~D0	03	00	
AFCRAN0	Horizontal AFC Switch 0: Normal, 1: Narrow	ALL	00H D1	00~01	00	
FDET-3	Frequency Detection Input Switch 0: 480i-1 • • • NTSC 1: 480i-2 • • • NTSC 2: D-SYNC2, 3: HD/VD	ANT A, B/NTSC	01H D7~D6	00~03	00	
HSEPL-3	Horizontal Sync Separation Level Switch。 0: 20%, 1: 27% 2: 34%, 3: 40%	ANT A, B/NTSC	01H D5~D4	00~03	00	
HSEPL-4		480i			00	
HSEPL-5		480p			00	
HSEPL-J		720p/1080i/ANT C			00	
VSEPL-3	Vertical Sync Separation Level switch 0: 40%, 1: 50% 2: 60%, 3: 70%	TV/NTSC	01H D3~D2	00~03	00	
VSEPL-4		480i			00	
VSEPL-5		480p			00	
VSEPL-J		720p/1080i/ANT C			00	
DSEPL-G	D-SYNC2-IN Sync Separation Level Switch 0: 20%, 1: 30%, 2: 40%, 3: 50%	480i/480p	01H D1~D0	00~03	00	
DSEPL-J		720p/1080i/ANT C			00	
AFCMD-1	AFC Gain Switch 0: AUTO 1, 1: AUTO 2 2: AUTO 3, 3: AUTO 4 4: +6 dB, 5: 0 dB, 6: -12 dB 7: OFF(Horizontal Free Run)	ANT A, B	02H D7~D5	00~07	03	
AFCMD-2		NTSC			02	
AFCMD-L		ANT C/YPBPR/DVD			05	
VMODE-0	Vertical Sync Mode Switch 0: Normal PLL Mode 1: Sync Output Mode	ALL	03H D2	00~01	00	
48ISEP3	480i Separator Mode Switch 0: ON, 1: OFF	ANT A, B/NTSC	03H D7	00~01	00	
HDPOSI3	HD Output Phase Adjustment 0: 800 ns Advance F: Sync Center	ANT A, B/NTSC	04H D3~D0	00~0F	06	
HDPOSI4		480i			05	
HDPOSI5		480p			00	
HDPOSI6		720p			09	
HDPOSI7		1080i (includes Bypass)			07	

BM: Bridge Media (540P)

III. ASSEMBLED P.W.B. ADJUSTMENT

Table 1. I²C Parameter List

Device Page: NJWxxxx

Adjustment Mode OSD	Adjustment Item	Address	Adjustment Range (HEX)	Initial Data (HEX)	Adjustment Value (HEX)
NJW1160/61/xx/xx 82H					
BBE-LO	BBE Low Frequency Effect Level 0dB~15dB	04H D7~D4	00~0F	09	
BBE-HI	BBE High Frequency Effect Level 0dB~15dB	04H D3~D0	00~0F	05	
AGC	AGC Level Setting 150m/300m/400m/540mVrms	05H D3, D2	00~03	01	

Device Page: FLEX

Adjustment Mode OSD	Adjustment Item		Address	Adjustment Range (HEX)	Initial Data (HEX)	Adjustment Value (HEX)
FC-4 Read Mode						
TVCINE	TV/Cinema Signal Detection 0: TV, 1: Cinema		40H D22	00~01	*	
MAXLVL1	Maximum signal level in Main picture		46H D15~D08	00~FF	*	
MAXLVL2	Maximum signal level in Sub picture		46H D15~D08	00~FF	*	
FC-4 Write Mode						
LINE-I0	Line Interpolation 0: OFF, 1: ON		01H D19	00~01	00	
SHP1	Sharpness Control Controls Y V H Enhance Gain	TV	02H D04~D00	00~1F	19	
SHP1-NR		TV-NR			08	
SHP2		NTSC			13	
SHP2-NR		NTSC-NR			08	
SHP4		480i			19	
SHP4-NR		480i-NR			08	
SHP5		480p			19	
SHP6		720p			19	
SHP7		1080i			19	
SHPT-NR		480p/720p/1080i-NR			08	
HE1	H Enhance	TV	02H D20~D19	00~03	01	
HE1-NR		TV-NR			00	
HE2		NTSC			01	
H.E3-NR		NTSC-NR			00	
HE4		480i			01	
HE4-NR		480i-NR			00	
HE5		480P			01	
HEJ		720p/1080i			01	
HET-NR		480p/720p/1080i-NR			00	
VE1	V Enhance	TV	02H D22~D21	00~03	02	
VE1-NR		TV-NR			00	
VE2		NTSC			02	
VE2-NR		NTSC-NR			00	
VE4		480i			02	
VE4-NR		480i-NR			00	
VE5		480P			02	
VEJ		720p/1080i			00	
VET-NR		480p/720p/1080i-NR			00	
CVHE1	Color Vertical Horizontal Enhance Gain	TV	02H D12~D08	00~1F	10	
CVHE3		NTSC/480i			10	
CVHET		480p/720p/1080i			0D	
YNR1	Y Noise Reduction Input Level	TV	02H D07~D05	00~07	04	
YNR2		NTSC			04	
YNR4		480i			04	
YNR5		480p			04	
YNRJ		720p/1080i			04	

III. ASSEMBLED P.W.B. ADJUSTMENT

Table 1. I²C Parameter List
Device Page: FLEX

Adjustment Mode OSD	Adjustment Item		Address	Adjustment Range (HEX)	Initial Data (HEX)	Adjustment Value (HEX)
CNR1	Color Noise Reduction Input Level	TV	02H D15~D13	00~07	04	
CNR2		NTSC			04	
CNR4		480i			04	
CNR5		480p			04	
CNRJ		720p/1080i			04	
FRMTOP	Frame Top Position	Split	04H	00~0F	00	
VPOSI6	TV Vertical Position	720p	03H D15~D09	00~7F	3F	
VPOSI7		1080i			3F	
BLKLV3	Blanking Level Adj. Brightness Amp.	TV/NTSC	05H D07~D00	00~FF	7F	
BLKLK		ANT C/YPBPR/DVD/BM (540p)			7F	
RGBAMP3	RGB Amp Adj. Contrast Amp	TV/NTSC	06H D07~D00	00~FF	7F	
BRTCEN3	Brightness Center Adj. Brightness (CM)	TV/NTSC/multi	07H D15~D08	00~FF	80	
BRTCENG		480i/480p			7C	
BRTCENJ		720p/1080i			7C	
CNTCEN3	Contrast Center Adj. Contrast (CM)	TV/NTSC	07H D07~D00	00~FF	89	
CNTCENK		ANT C/YPBPR/DVD/BM (540p)			89	
CNTCENC		SPLIT			3C	
4X3CENU		Contrast offset for 4:3 Standard			BC	
BSGOFS	Black Stretch Gain Offset	ALL	07H D21~D16	00~3F	1F	
COLORD	Color Adj. Color (CM)	SDTV(NT1/NT2/HD3/HD4/HD6)	08H D14~D08	00~7F	66	
COLORE		HDTV(NT3/HD2/HD1/HD5)			66	
TINTD	Tint Adj. Tint (CM)	SDTV(NT1/NT2/HD3/HD4/HD6)	08H D07~D00	00~FF	89	
TINTE		HDTV(NT3/HD2/HD1/HD5)			81	
HDMODE8		HD1/HD4			00	
FLAON		Auto signal level adj. (FLAON)	04H D14	0~1	0	
	R Gamma Offset	Color temp.: High	09H D21~D16	00~3F	1F	
R-C.O-M		Color temp: Medium			1F	
R-C.O-S		Color temp.: Standard			1F	
R-C.O-B		Color temp: B/W			1F	
G-C.O-H	G Gamma Offset	Color temp.: High	09H D13~D08	00~3F	1F	
G-C.O-M		Color temp: Medium			1F	
		Color temp: Standard			1F	
G-C.O-B		Color temp: B/W			1F	
B-C.O-H	B Gamma Offset	Color temp.: High	09H D05~D00	00~3F	1F	
B-C.O-M		Color temp: Medium			1F	
B-C.O-S		Color temp.: Standard			1F	
B-C.O-B		Color temp: B/W			1F	
S.CSTEP				00~FE	06	
S.C-UP				00~FE	E6	
S.C-LOW				00~FE	E0	
FC4.ORG	Enter FC4 adjust menu		04H D20	0~1	0	

III. ASSEMBLED P.W.B. ADJUSTMENT

Table 1. I²C Parameter List
LCD ADJUST Mode

Adjustment Mode OSD	Adjustment Item	Address	Adjustment Range (HEX)	Initial Data (HEX)	Adjustment Value (HEX)
GHOST (Sub mi-com)					
SHP	SHP (CXD3536/1015h/D5-D0) 00~3F	19h D21-D16	00~3F	2ch *	
GHOST-R	R-GC-ATT[7:0] (CXD3536)	1DH D7~D0	00~FF	00 *	
GHOST-G	G-GC-ATT[7:0] (CXD3536)	1EH D7~D0	00~FF	00 *	
GHOST-B	B-GC-ATT[7:0] (CXD3536)	1FH D7~D0	00~FF	00 *	
V.COM (Sub mi-com)					
VCOM-R	V-COM (CR7005-Red)	09H D22~D16	00~7F	60*	
VCOM-G	V-COM (CR7005-Green)	09H D14~D8	00~7F	60*	
VCOM-B	V-COM (CR7005-Blue)	09H D7~D0	00~7F	60*	
NRSH (Sub mi-com)					
VS-DAT1	VS_DAT1[5:0] (CXD3536)	20H D21~D16	00~3F	1F *	
VS-DAT2	VS_DAT2[5:0] (CXD3536)	20H D13~D8	00~3F	1F *	
VS-DAT3	VS_DAT3[5:0] (CXD3536)	20H D5~D0	00~3F	1F *	
VS-DAT4	VS_DAT4[5:0] (CXD3536)	21H D21~D16	00~3F	1F *	
VS-DAT5	VS_DAT5[5:0] (CXD3536)	21H D13~D8	00~3F	1F *	
VS-DAT6	VS_DAT6[5:0] (CXD3536)	21H D5~D0	00~3F	1F *	
VS-DAT7	VS_DAT7[5:0] (CXD3536)	22H D21~D16	00~3F	1F *	
VS-DAT8	VS_DAT8[5:0] (CXD3536)	22H D13~D8	00~3F	1F *	
VS-DAT9	VS_DAT9[5:0] (CXD3536)	22H D5~D0	00~3F	1F *	
GAMMA (Controlled by sub mi-com)					
GAM No	GAMMA INDEX No.	28H D05-D00	00~20	00	
R	R-GAM(CXD3536/8000h~)	29H D19-D10	000~3FF	_	
G	G-GAM(CXD3536/A000h~)	29H D09-D00	000~3FF	_	
B	B-GAM(CXD3536/C000h~)	2AH D09-D00	000~3FF	_	

III. ASSEMBLED P.W.B. ADJUSTMENT

Table 1. I²C Parameter List

LCD ADJUST Mode

Adjustment Mode OSD	Adjustment Item	Address	Adjustment Range (HEX)	Initial Data (HEX)	Adjustment Value (HEX)
C.UNIF (MIN) (Sub mi-com)					
POINT No	C.UNIF No.	25H D05-D00	01~19	01	
R	R-UNIF(CXD3536/4000h~)	26H D15-D08	00~FF	_	
G	G- UNIF (CXD3536/5000h~)	26H D07-D00	00~FF	_	
B	B- UNIF (CXD3536/6000h~)	27H D07-D00	00~FF	_	
C.UNIF (MIDL) (Sub mi-com)					
POINT No	C.UNIF No.	25H D05-D00	01~19	01	
R	R- UNIF (CXD3536/4000h~)	26H D15-D08	00~FF	_	
G	G- UNIF (CXD3536/5000h~)	26H D07-D00	00~FF	_	
B	B- UNIF (CXD3536/6000h~)	27H D07-D00	00~FF	_	
C.UNIF (MIDH) (Sub mi-com)					
POINT No	C.UNIF No.	25H D05-D00	01~19	01	
R	R- UNIF (CXD3536/4000h~)	26H D15-D08	00~FF	_	
G	G- UNIF (CXD3536/5000h~)	26H D07-D00	00~FF	_	
B	B- UNIF (CXD3536/6000h~)	27H D07-D00	00~FF	_	
C.UNIF (MAX) (Sub mi-com)					
POINT No	C.UNIF No.	25H D05-D00	01~19	01	
R	R- UNIF (CXD3536/4000h~)	26H D15-D08	00~FF	_	
G	G- UNIF (CXD3536/5000h~)	26H D07-D00	00~FF	_	
B	B- UNIF (CXD3536/6000h~)	27H D07-D00	00~FF	_	

III. ASSEMBLED P.W.B. ADJUSTMENT

Table 1. I²C Parameter List

No.	EEP	LABEL	Adjustment Item	Mode	Range		Initial	
0	000H	FLAMINTV	Auto Signal Level Adjustment Minimum Value	TV	0~255	0~FFH	8	8H
1	001H	FLAMAXTV	Auto Signal Level Adjustment Maximum Value	TV	0~255	0~FFH		
2	002H	ASBY	Y Brightness Auto Adjustment Value	TV	0~127	0~7FH	64	40H
3	003H	ASCY	Y Control Auto Adjustment Value	TV	0~127	0~7FH	64	40H
4	004H	FLAMINPC	Not Use	PC	0~255	0~FFH	0	0H
5	005H	FLAMAXPC	Not Use	PC	0~255	0~FFH	255	FFH
6	006H	ASBR	Not Use	PC	0~127	0~7FH	64	40H
7	007H	ASBG	Not Use	PC	0~127	0~7FH	64	40H
8	008H	ASBB	Not Use	PC	0~127	0~7FH	64	40H
9	009H	ASCR	Not Use	PC	0~127	0~7FH	64	40H
10	00AH	ASCG	Not Use	PC	0~127	0~7FH	64	40H
11	00BH	ASCB	Not Use	PC	0~127	0~7FH	64	40H
12	00CH	MBTV	Main Brightness (Black Level)	TV	0~255	0~FFH	94	5EH
13	00DH	MCTV	Main Contrast (Amplitude)	TV	0~255	0~FFH	176	B0H
14	00EH	SBY	Y Black Level (Sub Brightness)	TV	0~255	0~FFH	128	80H
15	00FH	SCY	Y Amplitude (Sub Contrast)	TV	0~255	0~FFH	134	86H
16	010H	MBPC	Not Use	PC	0~255	0~FFH	88	58H
17	011H	MCPC	Not Use	PC	0~255	0~FFH	176	B0H
18	012H	MCPC1V	Not Use	PC	0~255	0~FFH	148	94H
19	013H	SBR	Not Use	PC	0~255	0~FFH	128	80H
20	014H	SBG	Not Use	PC	0~255	0~FFH	128	80H
21	015H	SBB	Not Use	PC	0~255	0~FFH	128	80H
22	016H	SCR	Not Use	PC	0~255	0~FFH	168	A8H
23	017H	SCG	Not Use	PC	0~255	0~FFH	168	A8H
24	018H	SCB	Not Use	PC	0~255	0~FFH	168	A8H
25	019H	KMOSD	OSD Blend Ratio/Mode Switch		0~31	0~1FH	17	11H
26	01AH	OSDH	OSD Horizontal Standard Position		0~255	0~FFH	0	0H
27	01BH	OSDV	OSD Vertical Standard Position		0~255	0~FFH	0	0H
28	01CH	HPHS0	Horizontal Sync Horizontal Phase (Main)	ANT/Video	0~255	0~FFH	128	80H
29	01DH	HPHS1		480i	0~255	0~FFH	128	80H
30	01EH	HPHS2		480p	0~255	0~FFH	128	80H
31	01FH	HPHS3		1080i	0~255	0~FFH	128	80H
32	020H	HPHS4		720p	0~255	0~FFH	128	80H
33	021H	SHPHS0	Horizontal Sync Horizontal Phase (Sub)	ANT A/B, Video	0~255	0~FFH	128	80H
34	022H	SHPHS1		480i	0~255	0~FFH	128	80H
35	023H	SHPHS2		480p	0~255	0~FFH	128	80H
36	024H	SHPHS3		1080i	0~255	0~FFH	128	80H
37	025H	SHPHS4		720p	0~255	0~FFH	128	80H
38	026H	DMHPHS0	Horizontal Sync Horizontal Phase (DVI Main)	480i	0~255	0~FFH	128	80H
39	027H	DMHPHS1		480p	0~255	0~FFH	128	80H
40	028H	DMHPHS2		1080i	0~255	0~FFH	128	80H
41	029H	DMHPHS3		720p	0~255	0~FFH	128	80H
42	02AH	DMHPHS4		VGA	0~255	0~FFH	128	80H
43	02BH	DMHPHS5		SAMSUNG1080i	0~255	0~FFH	128	80H
44	02CH	DMHPHS6		SAMSUNG720P	0~255	0~FFH	128	80H

III. ASSEMBLED P.W.B. ADJUSTMENT

Table 1. I²C Parameter List

No.	EEP	LABEL	Adjustment Item	Mode	Range		Initial	
45	02DH	DSHPHS0	Horizontal Sync Horizontal Phase	480i	0~255	0~FFH	128	80H
46	02EH	DSHPHS1	(DVI Sub)	480p	0~255	0~FFH	128	80H
47	02FH	DSHPHS2		1080i	0~255	0~FFH	128	80H
48	030H	DSHPHS3		720p	0~255	0~FFH	128	80H
49	031H	DSHPHS4		VGA	0~255	0~FFH	128	80H
50	032H	DSHPHS5		SAMSUNG1080i	0~255	0~FFH	128	80H
51	033H	DSHPHS6		SAMSUNG720P	0~255	0~FFH	128	80H
52	034H	MVWHP0	Vertical Write Horizontal Phase (Main)	Main ANT/Video	0~7	0~7H	7	7H
53	035H	MVWHP1		Main 480i	0~7	0~7H	7	7H
54	036H	MVWHP2		Main 480p	0~7	0~7H	5	5H
55	037H	MVWHP3		Main 1080i	0~7	0~7H	3	3H
56	038H	MVWHP4		Main 720p	0~7	0~7H	6	6H
57	039H	SVWHP0	Vertical Write Horizontal Phase (Sub)	Sub ANT/Video	0~7	0~7H	7	7H
58	03AH	SVWHP1		Sub 480i	0~7	0~7H	7	7H
59	03BH	SVWHP2		Sub 480p	0~7	0~7H	5	5H
60	03CH	SVWHP4		Sub 1080i	0~7	0~7H	4	4H
61	03DH	SVWHP5		Sub 720p	0~7	0~7H	6	6H
62	03EH	DMVWHP0	Vertical Write Horizontal Phase	480i	0~7	0~7H	7	7H
63	03FH	DMVWHP1	(DVI Main)	480p	0~7	0~7H	5	5H
64	040H	DMVWHP2		1080i	0~7	0~7H	1	1H
65	041H	DMVWHP3		720p	0~7	0~7H	6	6H
66	042H	DMVWHP4		VGA	0~7	0~7H	5	5H
67	043H	DMVWHP5		SAMSUNG1080i	0~7	0~7H	7	7H
68	044H	DMVWHP6		SAMSUNG720P	0~7	0~7H	2	2H
69	045H	DSVWHP0	Vertical Write Horizontal Phase	480i	0~7	0~7H	7	7H
70	046H	DSVWHP1	(DVI Sub)	480p	0~7	0~7H	5	5H
71	047H	DSVWHP2		1080i	0~7	0~7H	1	1H
72	048H	DSVWHP3		720p	0~7	0~7H	6	6H
73	049H	DSVWHP4		VGA	0~7	0~7H	5	5H
74	04AH	DSVWHP5		SAMSUNG1080i	0~7	0~7H	7	7H
75	04BH	DSVWHP6		SAMSUNG720P	0~7	0~7H	2	2H
76	04CH	MVWHPPC	Not Use	PC	0~7	0~7H	-	-
77	04DH	SWVOFST00	Sub Picture Write Position Offset	«Φix Sub ANT/Video	0~255	0~FFH	128	80H
78	04EH	SWVOFST10		PIP Sub ANT/NTSC	0~255	0~FFH	128	80H
79	04FH	HHPF0	Horizontal Filter Switch	ANT/Video/Multi	0~1	0~1H	0	0H
80	050H	HHPF1		480i/480p/1080i/720p	0~1	0~1H	0	0H
81	051H	HECOR0~P0	Not Use	ANT/Multi	0~15	0~FH	0	0H
82	052H	HECOR1~P0		Video	0~15	0~FH	0	0H
83	053H	HECOR2~P0		480i	0~15	0~FH	1	1H
84	054H	HECOR3~P0		480p	0~15	0~FH	1	1H
85	055H	HECOR4~P0		1080i/720p	0~15	0~FH	1	1H
86	056H	HECOR5~P0		ANT-3	0~15	0~FH	1	1H
87	057H	HECOR6~P0		ANT/Video/480i	0~15	0~FH	3	3H
88	058H	HECOR7~P0		480p/1080i/720p	0~15	0~FH	3	3H
89	059H	HECORPC~P0		PC	0~15	0~FH	1	1H

III. ASSEMBLED P.W.B. ADJUSTMENT

Table 1. I²C Parameter List

No.	EEP	LABEL	Adjustment Item	Mode	Range		Initial	
90	05AH	VECOR0~P0	Not Use	ANT/Multi	0~15	0~FH	1	1H
91	05BH	VECOR1~P0		Video	0~15	0~FH	1	1H
92	05CH	VECOR2~P0		480i	0~15	0~FH	2	2H
93	05DH	VECOR3~P0		480p	0~15	0~FH	0	0H
94	05EH	VECOR4~P0		1080i/720p	0~15	0~FH	0	0H
95	05FH	VECOR5~P0		ANT-3	0~15	0~FH	1	1H
96	060H	VECOR6~P0		ANT/Video/480i	0~15	0~FH	3	3H
97	061H	VECOR7~P0		480p/1080i/720p	0~15	0~FH	15	FH
98	062H	VECORPC~P0		PC	0~15	0~FH	0	0H
99	063H	HECOR0~P1	Not Use	ANT/Multi	0~15	0~FH	0	0H
100	064H	HECOR1~P1		Video	0~15	0~FH	0	0H
101	065H	HECOR2~P1		480i	0~15	0~FH	1	1H
102	066H	HECOR3~P1		480p	0~15	0~FH	1	1H
103	067H	HECOR4~P1		1080i/720p	0~15	0~FH	1	1H
104	068H	HECOR5~P1		ANT-3	0~15	0~FH	1	1H
105	069H	HECOR6~P1		ANT/Video/480i	0~15	0~FH	3	3H
106	06AH	HECOR7~P1		480p/1080i/720p	0~15	0~FH	3	3H
107	06BH	HECORPC~P1		PC	0~15	0~FH	1	1H
108	06CH	VECOR0~P1	Not Use	ANT/Multi	0~15	0~FH	1	1H
109	06DH	VECOR1~P1		Video	0~15	0~FH	1	1H
110	06EH	VECOR2~P1		480i	0~15	0~FH	2	2H
111	06FH	VECOR3~P1		480p	0~15	0~FH	0	0H
112	070H	VECOR4~P1		1080i/720p	0~15	0~FH	0	0H
113	071H	VECOR5~P1		ANT-3	0~15	0~FH	1	1H
114	072H	VECOR6~P1		ANT/Video/480i	0~15	0~FH	3	3H
115	073H	VECOR7~P1		480p/1080i/720p	0~15	0~FH	15	FH
116	074H	VECORPC~P1		PC	0~15	0~FH	0	0H
117	075H	HECOR0~P2	Horizontal Coring	ANT/Multi	0~15	0~FH	0	0H
118	076H	HECOR1~P2		Video	0~15	0~FH	0	0H
119	077H	HECOR2~P2		480i	0~15	0~FH	1	1H
120	078H	HECOR3~P2		480p	0~15	0~FH	1	1H
121	079H	HECOR4~P2		1080i/720p	0~15	0~FH		
122	07AH	HECOR5~P2		ANT-3	0~15	0~FH	0	0H
123	07BH	HECOR6~P2		ANT/Video/480i	0~15	0~FH	0	0H
124	07CH	HECOR7~P2		480p/1080i/720p	0~15	0~FH	0	0H
125	07DH	HECORPC~P2	Not Use	PC	0~15	0~FH	1	1H
126	07EH	VECOR0~P2	Vertical Coring	ANT/Multi	0~15	0~FH	1	1H
127	07FH	VECOR1~P2		Video	0~15	0~FH	1	1H
128	080H	VECOR2~P2		480i	0~15	0~FH	1	1H
129	081H	VECOR3~P2		480p	0~15	0~FH	1	1H
130	082H	VECOR4~P2		1080i/720p	0~15	0~FH	0	0H
131	083H	VECOR5~P2		ANT-3	0~15	0~FH	0	0H
132	084H	VECOR6~P2		ANT/Video/480i	0~15	0~FH	0	0H
133	085H	VECOR7~P2		480p/1080i/720p	0~15	0~FH	0	0H
134	086H	VECORPC~P2	Not Use	PC	0~15	0~FH	0	0H

III. ASSEMBLED P.W.B. ADJUSTMENT

Table 1. I²C Parameter List

No.	EEP	LABEL	Adjustment Item	Mode	Range		Initial	
135	087H	MYNRG0	Main Y Frame Noise Reduction Input Gain (SPLIT)	ANT/Video/480i- ANT/Video/480i ANT/Video/480i- 480p/1080i/720p 480p/1080i/720p- ANT/Video/480i	0~7	0~7H	4	4H
136	088H	MYNRG1		480p/1080i/720p- 480p/1080i/720p	0~7	0~7H	4	4H
137	089H	MYNRG2	Main Y Frame Noise Reduction Input Gain (4 Pix)	ANT/Video/480i- ANT/Video/480i ANT/Video/480i- 480p/1080i/720p	0~7	0~7H	4	4H
138	08AH	MYNRG3		480p/1080i/720p- ANT/Video/480i 480p/1080i/720p- 480p/1080i/720p	0~7	0~7H	4	4H
139	08BH	SYNRG0	Sub Y Frame Noise Reduction Input Gain	2 Pix	0~7	0~7H	4	4H
140	08CH	SYNRG1	Sub Y Frame Noise Reduction Input Gain (4Pix/12Pix)	ANT/Video/480i- ANT/Video/480i 480p/1080i/720p- ANT/Video/480i	0~7	0~7H	4	4H
141	08DH	SYNRG2		ANT/Video/480i- 480p/1080i/720p 480p/1080i/720p- 480p/1080i/720p	0~7	0~7H	4	4H
142	08EH	MCNRG0	Main C Frame Noise Reduction Input Gain (SPLIT)	ANT/Video/480i- ANT/Video/480i ANT/Video/480i- 480p/1080i/720p 480p/1080i/720p- ANT/Video/480i	0~7	0~7H	4	4H
143	08FH	MCNRG1		480p/1080i/720p- 480p/1080i/720p	0~7	0~7H	4	4H
144	090H	MCNRG2	Main C Frame Noise Reduction Input Gain (4Pix)	ANT/Video/480i- ANT/Video/480i ANT/Video/480i- 480p/1080i/720p	0~7	0~7H	4	4H
145	091H	MCNRG3		480p/1080i/720p- ANT/Video/480i 480p/1080i/720p- 480p/1080i/720p	0~7	0~7H	4	4H
146	092H	SCNRG0	Sub C Frame Noise Reduction Input Gain	2 Pix	0~7	0~7H	4	4H
147	093H	SCNRG1	Sub C Frame Noise Reduction Input Gain (4Pix/12Pix)	ANT/Video/480i- ANT/Video/480i 480p/1080i/720p- ANT/Video/480i	0~7	0~7H	4	4H
148	094H	SCNRG2		ANT/Video/480i- 480p/1080i/720p 480p/1080i/720p- 480p/1080i/720p	0~7	0~7H	4	4H
149	095H	MYNRP0	Not Use (for PDP)	ANT/Multi	0~7	0~7H	0	0H
150	096H	MYNRP1		Video	0~7	0~7H	0	0H
151	097H	MYNRP2		480i	0~7	0~7H	0	0H
152	098H	MYNRP3		480p	0~7	0~7H	0	0H
153	099H	MYNRP4		1080i/720p	0~7	0~7H	0	0H
154	09AH	MYNRP5		ANT/Video-3	0~7	0~7H	0	0H
155	09BH	MCNRP0	Not Use (for PDP)	ANT/Multi	0~7	0~7H	2	2H
156	09CH	MCNRP1		Video	0~7	0~7H	2	2H
157	09DH	MCNRP2		480i	0~7	0~7H	2	2H
158	09EH	MCNRP3		480p	0~7	0~7H	2	2H
159	09FH	MCNRP4		1080i/720p	0~7	0~7H	0	0H
160	0A0H	MCNRP5		ANT/Video-3	0~7	0~7H	2	2H
161	0A1H	YVEG0~P0	Not Use (for PDP)	ANT/Video/480i/Multi	0~15	0~FH	15	FH
162	0A2H	YVEG1~P0		480p	0~15	0~FH	4	4H
163	0A3H	YVEG2~P0		1080i/720p	0~15	0~FH	15	FH
164	0A4H	YVDSBG0~P0	Not Use (for PDP)	ANT/Video/480i/Multi	0~3	0~3H	0	0H
165	0A5H	YVDSBG1~P0		480p	0~3	0~3H	0	0H
166	0A6H	YVDSBG2~P0		1080i/720p	0~3	0~3H	3	3H
167	0A7H	YVDSBC0~P0	Not Use (for PDP)	ANT/Video/480i/Multi	0~7	0~7H	0	0H
168	0A8H	YVDSBC1~P0		480p/1080i/720p	0~7	0~7H	3	3H
169	0A9H	YVECLP0~P0	Not Use (for PDP)	ANT/Video/480i/Multi	0~1	0~1H	1	1H
170	0AAH	YVECLP1~P0		480p/1080i/720p	0~1	0~1H	0	0H
171	0ABH	YVECLPL0~P0	Not Use (for PDP)	ANT/Video/480i/Multi	0~15	0~FH	15	FH
172	0ACH	YVECLPL1~P0		480p/1080i/720p	0~15	0~FH	2	2H
173	0ADH	YVNLP0~P0	Not Use (for PDP)	ANT/Video/480i/Multi	0~63	0~3FH	0	0H
174	0AEH	YVNLP1~P0		480p/1080i/720p	0~63	0~3FH	0	0H
175	0AFH	YHHPF0~P0	Not Use (for PDP)	ANT/Video/Multi	0~3	0~3H	2	2H
176	0B0H	YHHPF1~P0		480i	0~3	0~3H	2	2H
177	0B1H	YHHPF2~P0		480p	0~3	0~3H	2	2H
178	0B2H	YHHPF3~P0		1080i/720p	0~3	0~3H	2	2H

III. ASSEMBLED P.W.B. ADJUSTMENT

Table 1. I²C Parameter List

No.	EEP	LABEL	Adjustment Item	Mode	Range		Initial	
179	0B3H	YHEG0~P0	Not Use (for PDP)	ANT/Video/480i/Multi	0~15	0~FH	15	FH
180	0B4H	YHEG1~P0		480p	0~15	0~FH	15	FH
181	0B5H	YHEG2~P0		1080i/720p	0~15	0~FH	15	FH
182	0B6H	YHDSBG0~P0	Not Use (for PDP)	ANT/Video/Multi	0~3	0~3H	2	2H
183	0B7H	YHDSBG1~P0		480i	0~3	0~3H	2	2H
184	0B8H	YHDSBG2~P0		480p	0~3	0~3H	0	0H
185	0B9H	YHDSBG3~P0		1080i/720p	0~3	0~3H	2	2H
186	0BAH	YHDSBC0~P0	Not Use (for PDP)	ANT/Video/480i/Multi	0~7	0~7H	7	7H
187	0BBH	YHDSBC1~P0		480p/1080i/720p	0~7	0~7H	7	7H
188	0BCH	YHECLP0~P0	Not Use (for PDP)	ANT/Video/480i/Multi	0~1	0~1H	0	0H
189	0BDH	YHECLP1~P0		480p/1080i/720p	0~1	0~1H	0	0H
190	0BEH	YHECLPL0~P0	Not Use (for PDP)	ANT/Video/Multi	0~15	0~FH	4	4H
191	0BFH	YHECLPL1~P0		480i	0~15	0~FH	15	FH
192	0C0H	YHECLPL2~P0		480p/1080i/720p	0~15	0~FH	15	FH
193	0C1H	YHNLP0~P0	Not Use (for PDP)	ANT/Video/480i/Multi	0~63	0~3FH	0	0H
194	0C2H	YHNLP1~P0		480p/1080i/720p	0~63	0~3FH	0	0H
195	0C3H	YCOR0~P0	Not Use (for PDP)	ANT/Multi	0~7	0~7H	3	3H
196	0C4H	YCOR1~P0		Video	0~7	0~7H	2	2H
197	0C5H	YCOR2~P0		480i	0~7	0~7H	3	3H
198	0C6H	YCOR3~P0		480p	0~7	0~7H	2	2H
199	0C7H	YCOR4~P0		1080i/720p	0~7	0~7H	2	2H
200	0C8H	YCOR5~P0		ANT/Video-3	0~7	0~7H	7	7H
201	0C9H	YCOR6~P0		ANT/Video/480i	0~7	0~7H	7	7H
202	0CAH	YCOR7~P0		480p/1080i/720p	0~7	0~7H	7	7H
203	0CBH	YVEG0~P1	Not Use (for PDP)	ANT/Video/480i/Multi	0~15	0~FH	15	FH
204	0CCH	YVEG1~P1		480p	0~15	0~FH	4	4H
205	0CDH	YVEG2~P1		1080i/720p	0~15	0~FH	15	FH
206	0CEH	YVDSBG0~P1	Not Use (for PDP)	ANT/Video/480i/Multi	0~3	0~3H	0	0H
207	0CFH	YVDSBG1~P1		480p	0~3	0~3H	0	0H
208	0D0H	YVDSBG2~P1		1080i/720p	0~3	0~3H	3	3H
209	0D1H	YVDSBC0~P1	Not Use (for PDP)	ANT/Video/480i/Multi	0~7	0~7H	0	0H
210	0D2H	YVDSBC1~P1		480p/1080i/720p	0~7	0~7H	3	3H
211	0D3H	YVECLP0~P1	Not Use (for PDP)	ANT/Video/480i/Multi	0~1	0~1H	1	1H
212	0D4H	YVECLP1~P1		480p/1080i/720p	0~1	0~1H	0	0H
213	0D5H	YVECLPL0~P1	Not Use (for PDP)	ANT/Video/480i/Multi	0~15	0~FH	15	FH
214	0D6H	YVECLPL1~P1		480p/1080i/720p	0~15	0~FH	2	2H
215	0D7H	YVNLP0~P1	Not Use (for PDP)	ANT/Video/480i/Multi	0~63	0~3FH	0	0H
216	0D8H	YVNLP1~P1		480p/1080i/720p	0~63	0~3FH	0	0H
217	0D9H	YHHPF0~P1	Not Use (for PDP)	ANT/Video	0~3	0~3H	2	2H
218	0DAH	YHHPF1~P1		480i	0~3	0~3H	2	2H
219	0DBH	YHHPF2~P1		480p	0~3	0~3H	2	2H
220	0DCH	YHHPF3~P1		1080i/720p	0~3	0~3H	2	2H
221	0DDH	YHEG0~P1	Not Use (for PDP)	ANT/Video/480i/Multi	0~15	0~FH	15	FH
222	0DEH	YHEG1~P1		480p	0~15	0~FH	15	FH
223	0DFH	YHEG2~P1		1080i/720p	0~15	0~FH	15	FH
224	0E0H	YHDSBG0~P1	Not Use (for PDP)	ANT/Video	0~3	0~3H	2	2H
225	0E1H	YHDSBG1~P1		480i	0~3	0~3H	2	2H
226	0E2H	YHDSBG2~P1		480p	0~3	0~3H	0	0H
227	0E3H	YHDSBG3~P1		1080i/720p	0~3	0~3H	2	2H

III. ASSEMBLED P.W.B. ADJUSTMENT

Table 1. I²C Parameter List

No.	EEP	LABEL	Adjustment Item	Mode	Range		Initial	
228	0E4H	YHDSBC0~P1	Not Use (for PDP)	ANT/Video/480i/Multi	0~7	0~7H	7	7H
229	0E5H	YHDSBC1~P1		480p/1080i/720p	0~7	0~7H	7	7H
230	0E6H	YHECLP0~P1	Not Use (for PDP)	ANT/Video/480i/Multi	0~1	0~1H	0	0H
231	0E7H	YHECLP1~P1		480p/1080i/720p	0~1	0~1H	0	0H
232	0E8H	YHECLPL0~P1	Not Use (for PDP)	ANT/Video	0~15	0~FH	4	4H
233	0E9H	YHECLPL1~P1		480i	0~15	0~FH	15	FH
234	0EAH	YHECLPL2~P1		480p/1080i/720p	0~15	0~FH	15	FH
235	0EBH	YHNLP0~P1	Not Use (for PDP)	ANT/Video/480i/Multi	0~63	0~3FH	0	0H
236	0ECH	YHNLP1~P1		480p/1080i/720p	0~63	0~3FH	0	0H
237	0EDH	YCOR0~P1	Not Use (for PDP)	ANT/Multi	0~7	0~7H	3	3H
238	0EEH	YCOR1~P1		Video	0~7	0~7H	2	2H
239	0EFH	YCOR2~P1		480i	0~7	0~7H	3	3H
240	0F0H	YCOR3~P1		480p	0~7	0~7H	2	2H
241	0F1H	YCOR4~P1		1080i/720p	0~7	0~7H	2	2H
242	0F2H	YCOR5~P1		ANT/Video-3	0~7	0~7H	7	7H
243	0F3H	YCOR6~P1		ANT/Video/480i	0~7	0~7H	7	7H
244	0F4H	YCOR7~P1		480p/1080i/720p	0~7	0~7H	7	7H
245	0F5H	YVEG0~P2	Y/G Vertical Enhance Gain	ANT/Video/480i/Multi	0~15	0~FH	6	6H
246	0F6H	YVEG1~P2		480p	0~15	0~FH	8	8H
247	0F7H	YVEG2~P2		1080i/720p	0~15	0~FH	8	8H
248	0F8H	YVDSBG0~P2	Y/G Vertical Dynamic Shoot Balance Gain	ANT/Video/480i/Multi	0~3	0~3H	0	0H
249	0F9H	YVDSBG1~P2		480p	0~3	0~3H	0	0H
250	0FAH	YVDSBG2~P2		1080i/720p	0~3	0~3H	0	0H
251	0FBH	YVDSBC0~P2	Y/G Vertical Dynamic Shoot Balance Coring	ANT/Video/480i/Multi	0~7	0~7H	7	7H
252	0FCH	YVDSBC1~P2		480p/1080i/720p	0~7	0~7H	7	7H
253	0FDH	YVECLP0~P2	Y/G Vertical Enhance	ANT/Video/480i/Multi	0~1	0~1H	0	0H
254	0FEH	YVECLP1~P2		480p/1080i/720p	0~1	0~1H	0	0H
255	0FFH	YVECLPL0~P2	Y/G Vertical Clip Offset Level	ANT/Video/480i/Multi	0~15	0~FH	15	FH
256	100H	YVECLPL1~P2		480p/1080i/720p	0~15	0~FH	5	5H
257	101H	YVNLP0~P2	Y/G Vertical Non Linear Peaking	ANT/Video/480i/Multi	0~63	0~3FH	0	0H
258	102H	YVNLP1~P2		480p/1080i/720p	0~63	0~3FH	0	0H
259	103H	YHHPF0~P2	Y/G Horizontal HPF Peak Frequency Switch	ANT/Video/Multi	0~3	0~3H	2	2H
260	104H	YHHPF1~P2		480i	0~3	0~3H	2	2H
261	105H	YHHPF2~P2		480p	0~3	0~3H	2	2H
262	106H	YHHPF3~P2		1080i/720p	0~3	0~3H	1	1H
263	107H	YHEG0~P2	Y/G Horizontal Enhance Gain	ANT/Video/480i/Multi	0~15	0~FH	11	BH
264	108H	YHEG1~P2		480p	0~15	0~FH	10	AH
265	109H	YHEG2~P2		1080i/720p	0~15	0~FH	10	AH
266	10AH	YHDSBG0~P2	Y/G Horizontal Dynamic Shoot Balance Gain	ANT/Video/Multi	0~3	0~3H	1	1H
267	10BH	YHDSBG1~P2		480i	0~3	0~3H	1	1H
268	10CH	YHDSBG2~P2		480p	0~3	0~3H	1	1H
269	10DH	YHDSBG3~P2		1080i/720p	0~3	0~3H	2	2H
270	10EH	YHDSBC0~P2	Y/G Horizontal Dynamic Shoot Balance Coring	ANT/Video/480i/Multi	0~7	0~7H	7	7H
271	10FH	YHDSBC1~P2		480p/1080i/720p	0~7	0~7H	7	7H
272	110H	YHECLP0~P2	Y/G Horizontal Enhance	ANT/Video/480i/Multi	0~1	0~1H	0	0H
273	111H	YHECLP1~P2		480p/1080i/720p	0~1	0~1H	0	0H
274	112H	YHECLPL0~P2	Y/G Horizontal Clip Offset Level	ANT/Video/Multi	0~15	0~FH	7	7H
275	113H	YHECLPL1~P2		480i	0~15	0~FH	7	7H
276	114H	YHECLPL2~P2		480p/1080i/720p	0~15	0~FH	15	FH
277	115H	YHNLP0~P2	Y/G Horizontal Non Linear Peaking	ANT/Video/480i/Multi	0~63	0~3FH	0	0H
278	116H	YHNLP1~P2		480p/1080i/720p	0~63	0~3FH	0	0H

III. ASSEMBLED P.W.B. ADJUSTMENT

Table 1. I²C Parameter List

No.	EEP	LABEL	Adjustment Item	Mode	Range		Initial	
279	117H	YCOR0~P2	Y/G Coring Amplitude	ANT/Multi	0~7	0~7H	3	3H
280	118H	YCOR1~P2		Video	0~7	0~7H	4	4H
281	119H	YCOR2~P2		480i	0~7	0~7H	4	4H
282	11AH	YCOR3~P2		480p	0~7	0~7H	4	4H
283	11BH	YCOR4~P2		1080i/720p	0~7	0~7H	3	3H
284	11CH	YCOR5~P2		ANT/Video-3	0~7	0~7H	7	7H
285	11DH	YCOR6~P2		ANT/Video/480i	0~7	0~7H	7	7H
286	11EH	YCOR7~P2		480p/1080i/720p	0~7	0~7H	7	7H
287	11FH	YLMT0	Y/G Amplitude Limit	ANT/Video/480i/Multi	0~255	0~FFH	255	FFH
288	120H	YLMT1		480p/1080i/720p	0~255	0~FFH	255	FFH
289	121H	CVEG0	B-Y/B, R-Y/R Vertical Enhance Gain	ANT/Video/480i/Multi	0~15	0~FH	15	FH
290	122H	CVEG1		480p/1080i/720p	0~15	0~FH	9	9H
291	123H	CVDSBG0	B-Y/B, R-Y/R Vertical Dynamic Shoot Balance Gain	ANT/Video/480i/Multi	0~3	0~3H	0	0H
292	124H	CVDSBG1		480p/1080i/720p	0~3	0~3H	0	0H
293	125H	CVDSBC0	B-Y/B, R-Y/R Vertical Dynamic Shoot Balance Coring	ANT/Video/480i/Multi	0~7	0~7H	0	0H
294	126H	CVDSBC1		480p/1080i/720p	0~7	0~7H	0	0H
295	127H	CVECLP0	B-Y/B, R-Y/R Vertical Enhance	ANT/Video/480i/Multi	0~1	0~1H	0	0H
296	128H	CVECLP1		480p/1080i/720p	0~1	0~1H	0	0H
297	129H	CHHPF0	B-Y/B, R-Y/R Horizontal HPF Peak Frequency Switch	ANT/Video/480i/Multi	0~3	0~3H	2	2H
298	12AH	CHHPF1		480p/1080i/720p	0~3	0~3H	2	2H
299	12BH	CHEG0	B-Y/B, R-Y/R Horizontal Enhance Gain	ANT/Video/480i/Multi	0~15	0~FH	15	FH
300	12CH	CHEG1		480p/1080i/720p	0~15	0~FH	9	9H
301	12DH	CHDSBG0	B-Y/B, R-Y/R Horizontal Dynamic Shoot Balance Gain	ANT/Video/480i/Multi	0~3	0~3H	0	0H
302	12EH	CHDSBG1		480p/1080i/720p	0~3	0~3H	0	0H
303	12FH	CHDSBC0	B-Y/B, R-Y/R G Horizontal Dynamic Shoot Balance Coring	ANT/Video/480i/Multi	0~7	0~7H	0	0H
304	130H	CHDSBC1		480p/1080i/720p	0~7	0~7H	0	0H
305	131H	CHECLP0	B-Y/B, R-Y/R Horizontal Enhance	ANT/Video/480i/Multi	0~1	0~1H	0	0H
306	132H	CHECLP1		480p/1080i/720p	0~1	0~1H	0	0H
307	133H	CCOR0	B-Y/B, R-Y/R Coring Amplitude	ANT/Video/480i/Multi	0~7	0~7H	1	1H
308	134H	CCOR1		480p/1080i/720p	0~7	0~7H	1	1H
309	135H	TCGON	TV/Cinema Vertical Gate Display ON	ANT/Video/480i 480p/1080i/720p	0~1	0~1H	0	0H
310	136H	TCGVS0	TV/Cinema Gate Vertical Start Position	ANT/Video/480i	0~255	0~FFH	72	48H
311	137H	TCGVW0	TV/Cinema Gate Vertical Width	ANT/Video/480i	0~255	0~FFH	100	64H
312	138H	TC23OFF0	2-3 Pull down TV/Cinema OFF	ANT/Video/480i	0~1	0~1H	0	0H
313	139H	TC23UL0	2-3 Pull down Unlock Protect Times	ANT/Video/480i	0~7	0~7H	0	0H
314	13AH	TC23L0	2-3 Pull down Lock Protect Times	ANT/Video/480i	0~7	0~7H	3	3H
315	13BH	TCGVS1	TV/Cinema Gate Start Position	1080i	0~255	0~FFH	160	A0H
316	13CH	TCGVW1	TV/Cinema Gate Vertical Width	1080i	0~255	0~FFH	225	E1H
317	13DH	TC23OFF1	2-3 Pull down TV/Cinema OFF	1080i	0~1	0~1H	0	0H
318	13EH	TC23UL1	2-3 Pull down Unlock Protect Times	1080i	0~7	0~7H	0	0H
319	13FH	TC23L1	2-3 Pull down Lock Protect Times	1080i	0~7	0~7H	3	3H
320	140H	TC23YSL	2-3 Pull down Y Threshold	ANT/Video/480i/1080i	0~255	0~FFH	8	8H

III. ASSEMBLED P.W.B. ADJUSTMENT

Table 1. I²C Parameter List

No.	EEP	LABEL	Adjustment Item	Mode	Range		Initial	
321	141H	TC23CSL	2-3 Pull down C Threshold	ANT/Video/480i/1080i	0~255	0~FFH	7	7H
322	142H	TC23MSL0	2-3 Pull down Moving Area Threshold	ANT/Video/480i	0~255	0~FFH	10	AH
323	143H	TC23MSL1		1080i	0~255	0~FFH	19	13H
324	144H	TC22OFF	Not Use	ANT/Video/480i	0~1	0~1H	1	1H
325	145H	TC22UL	Not Use	ANT/Video/480i	0~7	0~7H	0	0H
326	146H	TC22L	Not Use	ANT/Video/480i	0~7	0~7H	7	7H
327	147H	TC22FIA	Not Use	ANT/Video/480i	0~255	0~FFH	7	7H
328	148H	TC22FR2	Not Use	ANT/Video/480i	0~255	0~FFH	10	AH
329	149H	TC22FI	Not Use	ANT/Video/480i	0~255	0~FFH	13	DH
330	14AH	TC22FR	Not Use	ANT/Video/480i	0~255	0~FFH	35	23H
331	14BH	TC22TB	Not Use	ANT/Video/480i	0~255	0~FFH	7	7H
332	14CH	TCLOCK	TV/Cinema Flag [0]: Monitor [1]: Control [2]: 2-3 [3]: 2-2		0~15	0~FH	-	-
333	14DH	SCDLY0	Cb, Cr (B, R) Picture Delay Adjustment	ANT/Video/Multi	0~3	0~3H	2	0H
334	14EH	SCDLY1		480i	0~3	0~3H	2	2H
335	14FH	SCDLY2		480p	0~3	0~3H	2	2H
336	150H	SCDLY3		1080i	0~3	0~3H	2	2H
337	151H	SCDLY4		720p	0~3	0~3H	2	2H
338	152H	YMTES	Y Motion Detection	ANT/Video/480i/1080i	0~3	0~3H	0	0H
339	153H	CMTES	C Motion Detection	ANT/Video/480i/1080i	0~3	0~3H	0	0H
340	154H	IPMODE	IP Mode	ANT/Video/480i/1080i	0~3	0~3H	0	0H
341	155H	CINT	C Interpolation	ANT/Video/480i/1080i	0~1	0~1H	0	0H
342	156H	YNIP	Y Slant Interpolation OFF	ANT/Video/480i/1080i	0~1	0~1H	0	0H
343	157H	CNIP	C Slant Interpolation OFF	ANT/Video/480i/1080i	0~1	0~1H	0	0H
344	158H	YNIPHECR0	Y Slant Horizontal Edge Coring	ANT/Video/480i	0~255	0~FFH	4	4H
345	159H	YNIPHECR1		1080i	0~255	0~FFH	4	4H
346	15AH	YNIPSBCR	Y Slant Difference Coring	ANT/Video/480i/1080i	0~255	0~FFH	20	14H
347	15BH	YNIPV2CR	Y Slant Vertical Edge 2 Coring	ANT/Video/480i/1080i	0~255	0~FFH	20	14H
348	15CH	YNIPV1CR	Y Slant Vertical Edge 1 Coring	ANT/Video/480i/1080i	0~255	0~FFH	20	14H
349	15DH	YVEGAIN	Y Vertical Edge Detection Gain	ANT/Video/480i/1080i	0~3	0~3H	3	3H
350	15EH	YVECOR	Y Vertical Edge Detection Coring	ANT/Video/480i/1080i	0~15	0~FH	4	4H
351	15FH	YHEGAIN	Y Horizontal Edge Detection Gain	ANT/Video/480i/1080i	0~3	0~3H	3	3H
352	160H	YHECOR	Y Horizontal Edge Detection Coring	ANT/Video/480i/1080i	0~15	0~FH	4	4H
353	161H	YME0GIN	Y Motion Detection Edge 0 Gain Selection	ANT/Video/480i/1080i	0~7	0~7H	5	5H
354	162H	YME0COR	Y Motion Detection Edge 0 Coring	ANT/Video/480i/1080i	0~31	0~1FH	5	5H
355	163H	YME1GIN	Y Motion Detection Edge 1 Gain Selection	ANT/Video/480i/1080i	0~7	0~7H	5	5H
356	164H	YME1COR	Y Motion Detection Edge 1 Coring	ANT/Video/480i/1080i	0~31	0~1FH	5	5H
357	165H	YME2GIN	Y Motion Detection Edge 2 Gain Selection	ANT/Video/480i/1080i	0~7	0~7H	2	2H
358	166H	YME2COR	Y Motion Detection Edge 2 Coring	ANT/Video/480i/1080i	0~31	0~1FH	8	8H
359	167H	YME3GIN	Y Motion Detection Edge 3 Gain Selection	ANT/Video/480i/1080i	0~7	0~7H	2	2H
360	168H	YME3COR	Y Motion Detection Edge 3 Coring	ANT/Video/480i/1080i	0~31	0~1FH	8	8H
361	169H	CME0GIN	C Motion Detection Edge 0 Gain Selection	ANT/Video/480i/1080i	0~7	0~7H	4	4H
362	16AH	CME0COR	C Motion Detection Edge 0 Coring	ANT/Video/480i/1080i	0~31	0~1FH	6	6H

III. ASSEMBLED P.W.B. ADJUSTMENT

Table 1. I²C Parameter List

No.	EEP	LABEL	Adjustment Item	Mode	Range		Initial	
363	16BH	CME1GIN	C Motion Detection Edge 1 Gain Selection	ANT/Video/480i/1080i	0~7	0~7H	3	3H
364	16CH	CME1COR	C Motion Detection Edge 1 Coring	ANT/Video/480i/1080i	0~31	0~1FH	8	8H
365	16DH	CME2GIN	C Motion Detection Edge 2 Gain Selection	ANT/Video/480i/1080i	0~7	0~7H	2	2H
366	16EH	CME2COR	C Motion Detection Edge 2 Coring	ANT/Video/480i/1080i	0~31	0~1F	10	AH
367	16FH	CME3GIN	C Motion Detection Edge 3 Gain Selection	ANT/Video/480i/1080i	0~7	0~7H	1	1H
368	170H	CME3COR	C Motion Detection Edge 3 Coring	ANT/Video/480i/1080i	0~31	0~1FH	12	CH
369	171H	MOVMD	Screen Saver Mode		0~3	0~3H	0	0H
370	172H	MOVVL	Screen Saver Movement Value MOVVL+1dot		0~2	0~2H	0	0H
371	173H	MOVT0	Screen Saver Movement Time 1 0-60:0-60sec 61-120:1-60min		0~120	0~78H	80	50H
372	174H	MOVT1	Screen Saver Movement Time 2 0-60:0-60sec 61-120:1-60min		0~120	0~78H	100	64H
373	175H	MOVT2	Screen Saver Movement Time 3 0-60:0-60sec 61-120:1-60min		0~120	0~78H	120	78H
374	176H	CLPOFSCB0~P01	Not Use	ANT/Video/480i/480p	0~255	0~FFH	128	80H
375	177H	CLPOFSCR0~P01	Not Use	ANT/Video/480i/480p	0~255	0~FFH	128	80H
376	178H	CLPOFSCB1~P01	Not Use	1080i	0~255	0~FFH	128	80H
377	179H	CLPOFSCR1~P01	Not Use	1080i	0~255	0~FFH	128	80H
378	17AH	CLPOFSCB2~P01	Not Use	720p	0~255	0~FFH	128	80H
379	17BH	CLPOFSCR2~P01	Not Use	720p	0~255	0~FFH	128	80H
380	17CH	CLPOFSCB3~P01	Not Use	DVI (Not VGA)	0~255	0~FFH	128	80H
381	17DH	CLPOFSCR3~P01	Not Use	DVI (Not VGA)	0~255	0~FFH	128	80H
382	17EH	CLPOFSCB4~P01	Not Use	DVI (VGA)	0~255	0~FFH	128	80H
383	17FH	CLPOFSCR4~P01	Not Use	DVI (VGA)	0~255	0~FFH	128	80H
384	180H	CLPOFSCB0~P2	B-Y Clamp offset (for LCD/PDP50î)	ANT/Video/480i/480p	0~255	0~FFH	128	80H
385	181H	CLPOFSCR0~P2	R-Y Clamp offset (for LCD/PDP50î)	ANT/Video/480i/480p	0~255	0~FFH	128	80H
386	182H	CLPOFSCB1~P2	B-Y Clamp offset (for LCD/PDP50î)	1080i	0~255	0~FFH	128	80H
387	183H	CLPOFSCR1~P2	R-Y Clamp offset (for LCD/PDP50î)	1080i	0~255	0~FFH	128	80H
388	184H	CLPOFSCB2~P2	B-Y Clamp offset (for LCD/PDP50î)	720p	0~255	0~FFH	128	80H
389	185H	CLPOFSCR2~P2	R-Y Clamp offset (for LCD/PDP50î)	720p	0~255	0~FFH	128	80H
390	186H	CLPOFSCB3~P2	B-Y Clamp offset (for LCD/PDP50î)	DVI (Not VGA)	0~255	0~FFH	128	80H
391	187H	CLPOFSCR3~P2	R-Y Clamp offset (for LCD/PDP50î)	DVI (Not VGA)	0~255	0~FFH	128	80H
392	188H	CLPOFSCB4~P2	B-Y Clamp offset (for LCD/PDP50î)	DVI (VGA)	0~255	0~FFH	128	80H
393	189H	CLPOFSCR4~P2	R-Y Clamp offset (for LCD/PDP50î)	DVI (VGA)	0~255	0~FFH	128	80H
394	18AH	CMOFF	Color Management OFF		0~1	0~1H	0	0H
395	18BH	TNTOFF	Tint OFF		0~1	0~1H	0	0H
396	18CH	CLROFF	Color OFF		0~1	0~1H	0	0H
397	18DH	MODECM	Color Management Adjustment		0~4	0~4H	1	1H
398	18EH	HUCENMC0	CbCr Hue Center 0 (MSB), (LSB)	(CbCr)	0~3	0~3H	0	0H
400	190H	HUWC0	CbCr Hue Width 0	(CbCr)	0~255	0~FFH	128	80H
401	191H	HUCLPC0	CbCr Hue Clip 0 0: -128, 128: 0, 255: +127	(CbCr)	0~255	0~FFH	128	80H
402	192H	HUKC0	CbCr Hue Slope 0 (±127)	(CbCr)	0~255	0~FFH	32	20H

III. ASSEMBLED P.W.B. ADJUSTMENT

Table 1. I²C Parameter List

No.	EEP	LABEL	Adjustment Item	Mode	Range		Initial	
403	193H	HUCENMC1	CbCr Hue Center 1 (MSB), (LSB)	(CbCr)	0~3	0~3H	1	1H
404	194H	HUCENLC1			0~1023	0~3FFH	322	142H
405	195H	HUWC1	CbCr Hue Width 1	(CbCr)	0~255	0~FFH	255	FFH
406	196H	HUCLPC1	CbCr Hue Clip 1 0: -128, 128: 0, 255: +127	(CbCr)	0~255	0~FFH	128	80H
407	197H	HUKC1	CbCr Hue Slope 1 (±127)	(CbCr)	0~255	0~FFH	64	40H
408	198H	HUCENMC2	CbCr Hue Center 2 (MSB), (LSB)	(CbCr)	0~3	0~3H	1	1H
409	199H	HUCENLC2			0~1023	0~3FFH	390	186H
410	19AH	HUWC2	CbCr Hue Width 2	(CbCr)	0~255	0~FFH	128	80H
411	19BH	HUCLPC2	CbCr Hue Clip 2 0: -128, 128: 0, 255: +127	(CbCr)	0~255	0~FFH	128	80H
412	19CH	HUKC2	CbCr Hue Slope 2 (±127)	(CbCr)	0~255	0~FFH	32	20H
413	19DH	HUCENMC3	CbCr Hue Center 3 (MSB), (LSB)	(CbCr)	0~3	0~3H	2	2H
414	19EH	HUCENLC3			0~1023	0~3FFH	596	254H
415	19FH	HUWC3	CbCr Hue Width 3	(CbCr)	0~255	0~FFH	255	FFH
416	1A0H	HUCLPC3	CbCr Hue Clip 3 0: -128, 128: 0, 255: +127	(CbCr)	0~255	0~FFH	133	85H
417	1A1H	HUKC3	CbCr Hue Slope 3 (±127)	(CbCr)	0~255	0~FFH	64	40H
418	1A2H	HUCENMC4	CbCr Hue Center 4 (MSB), (LSB)	(CbCr)	0~3	0~3H	3	3H
419	1A3H	HUCENLC4			0~1023	0~3FFH	834	342H
420	1A4H	HUWC4	CbCr Hue Width 4	(CbCr)	0~255	0~FFH	255	FFH
421	1A5H	HUCLPC4	CbCr Hue Clip 4 0: -128, 128: 0, 255: +127	(CbCr)	0~255	0~FFH	128	80H
422	1A6H	HUKC4	CbCr Hue Slope 4 (±127)	(CbCr)	0~255	0~FFH	64	40H
423	1A7H	HUCENMC5	CbCr Hue Center 5 (MSB), (LSB)	(CbCr)	0~3	0~3H	3	3H
424	1A8H	HUCENLC5			0~1023	0~3FFH	941	3ADH
425	1A9H	HUWC5	CbCr Hue Width 5	(CbCr)	0~255	0~FFH	180	B4H
426	1AAH	HUCLPC5	CbCr Hue Clip 5 0: -128, 128: 0, 255: +127	(CbCr)	0~255	0~FFH	128	80H
427	1ABH	HUKC5	CbCr Hue Slope 5	(CbCr)	0~255	0~FFH	38	26H
428	1ACH	HUCENMC6	CbCr Auto Color Hue Center 6	(CbCr)	0~3	0~3H	1	1H
429	1ADH	HUCENLC6	(MSB), (LSB)		0~1023	0~3FFH	307	133H
430	1AEH	HUWC6	CbCr Auto Color Hue Width 6	(CbCr)	0~255	0~FFH	85	55H
431	1AFH	HUCLPC6	CbCr Auto Color Hue Clip 6 0: -128, 128: 0, 255: +127	(CbCr)	0~255	0~FFH	175	AFH
432	1B0H	HUKC6	CbCr Hue Slope 6 (±127)	(CbCr)	0~255	0~FFH	47	2FH
433	1B1H	HUCENMC7	CbCr Auto Color Hue Center 7	(CbCr)	0~3	0~3H	1	1H
434	1B2H	HUCENLC7	(MSB), (LSB)		0~1023	0~3FFH	392	188H
435	1B3H	HUWC7	CbCr Auto Color Hue Width 7	(CbCr)	0~255	0~FFH	85	55H
436	1B4H	HUCLPC7	CbCr Auto Color Hue Clip 7 0: -128 128:0 255: +127	(CbCr)	0~255	0~FFH	81	51H
437	1B5H	HUKC7	CbCr Hue Slope 7 (±127)	(CbCr)	0~255	0~FFH	47	2FH
438	1B6H	SACENMC0	CbCr Saturation Hue Center 0	(CbCr)	0~3	0~3H	0	0H
439	1B7H	SACENLC0	(MSB), (LSB)		0~255	0~3FFH	128	80H
440	1B8H	SAWC0	CbCr Saturation Hue Width 0	(CbCr)	0~255	0~FFH	128	80H
441	1B9H	SACLPC0	CbCr Saturation Clip 0 0: -128, 128: 0, 255: +127	(CbCr)	0~255	0~FFH	128	80H
442	1BAH	SAKC0	CbCr Saturation Slope 0	(CbCr)	0~255	0~FFH	64	40H

III. ASSEMBLED P.W.B. ADJUSTMENT

Table 1. I²C Parameter List

No.	EEP	LABEL	Adjustment Item	Mode	Range		Initial	
443	1BBH	SACENMC1	CbCr Saturation Hue Center 1	(CbCr)	0~3	0~3H	1	1H
444	1BCH	SACENLC1	(MSB), (LSB)		0~1023	0~3FFH	323	143H
445	1BDH	SAWC1	CbCr Saturation Hue Width 1	(CbCr)	0~255	0~FFH	255	**FFH**
446	1BEH	SACLPC1	CbCr Saturation Clip 1 0: -128, 128: 0, 255: +127	(CbCr)	0~255	0~FFH	132	84H
447	1BFH	SAKC1	CbCr Saturation Slope 1	(CbCr)	0~255	0~FFH	64	40H
448	1C0H	SACENMC2	CbCr Saturation Hue Center 2	(CbCr)	0~3	0~3H	1	1H
449	1C1H	SACENLC2	(MSB), (LSB)		0~1023	0~3FFH	492	1ECH
450	1C2H	SAWC2	CbCr Saturation Hue Width 2	(CbCr)	0~255	0~FFH	255	FFH
451	1C3H	SACLPC2	CbCr Saturation Clip 2 0: -128, 128: 0, 255: +127	(CbCr)	0~255	0~FFH	128	80H
452	1C4H	SAKC2	CbCr Saturation Slope 2	(CbCr)	0~255	0~FFH	64	40H
453	1C5H	SACENMC3	CbCr Saturation Hue Center 3	(CbCr)	0~3	0~3H	2	2H
454	1C6H	SACENLC3	(MSB), (LSB)		0~1023	0~3FFH	643	283H
455	1C7H	SAWC3	CbCr Saturation Hue Width 3	(CbCr)	0~255	0~FFH	255	FFH
456	1C8H	SACLPC3	CbCr Saturation Clip 3 0: -128, 128: 0, 255: +127	(CbCr)	0~255	0~FFH	120	78H
457	1C9H	SAKC3	CbCr Saturation Slope 3	(CbCr)	0~255	0~FFH	64	40H
458	1CAH	SACENMC4	CbCr Saturation Hue Center 4	(CbCr)	0~3	0~3H	3	3H
459	1CBH	SACENLC4	(MSB), (LSB)		0~1023	0~3FFH	834	342H
460	1CCH	SAWC4	CbCr Saturation Hue Width 4	(CbCr)	0~255	0~FFH	128	80H
461	1CDH	SACLPC4	CbCr Saturation Clip 4 0: -128, 128: 0, 255: +127	(CbCr)	0~255	0~FFH	115	73H
462	1CEH	SAKC4	CbCr Saturation Slope 4	(CbCr)	0~255	0~FFH	64	40H
463	1CFH	SACENMC5	CbCr Saturation Hue Center 5	(CbCr)	0~3	0~3H	3	3H
464	1D0H	SACENLC5	(MSB), (LSB)		0~1023	0~3FFH	1004	3ECH
465	1D1H	SAWC5	CbCr Saturation Hue Width 5	(CbCr)	0~255	0~FFH	255	FFH
466	1D2H	SACLPC5	CbCr Saturation Clip 5 0: -128, 128: 0, 255: +127	(CbCr)	0~255	0~FFH	128	80H
467	1D3H	SAKC5	CbCr Saturation Slope 5	(CbCr)	0~255	0~FFH	64	40H
468	1D4H	SACENMC6	CbCr Saturation Hue Center 6	(CbCr)	0~3	0~3H	3	3H
469	1D5H	SACENLC6	(MSB), (LSB)		0~1023	0~3FFH	931	3A3H
470	1D6H	SAWC6	CbCr Saturation Hue Width 6 45~~5,~~128	(CbCr)	0~255	0~FFH	140	8CH
471	1D7H	SACLPC6	CbCr Saturation Clip 6 0: -128, 128: 0, 255: +127	(CbCr)	0~255	0~FFH	128	80H
472	1D8H	SAKC6	CbCr Saturation Slope 6	(CbCr)	0~255	0~FFH	42	2AH
473	1D9H	SACENMC7	CbCr Saturation Hue Center 7	(CbCr)	0~3	0~3H	3	3H
474	1DAH	SACENLC7	(MSB), (LSB)		0~1023	0~3FFH	845	34DH
475	1DBH	SAWC7	CbCr Saturation Hue Width 7	(CbCr)	0~255	0~FFH	70	46H
476	1DCH	SACLPC7	CbCr Saturation Clip 7 0: -128, 128: 0, 255: +127	(CbCr)	0~255	0~FFH	128	80H
477	1DDH	SAKC7	CbCr Saturation Slope 7	(CbCr)	0~255	0~FFH	32	20H
478	1DEH	HUCENMP0	PbPr Hue Center 0	(PbPr)	0~3	0~3H	3	3H
479	1DFH	HUCENLP0	(MSB), (LSB)		0~1023	0~3FFH	790	316H
480	1E0H	HUWP0	PbPr Hue Width 0	(PbPr)	0~255	0~FFH	125	7DH
481	1E1H	HUCLPP0	PbPr Hue Clip 0 0: -128, 128: 0, 255: +127	(PbPr)	0~255	0~FFH	128	80H
482	1E2H	HUKP0	PbPr Hue Slope 0 (±127)	(PbPr)	0~255	0~FFH	32	20H

III. ASSEMBLED P.W.B. ADJUSTMENT

Table 1. I²C Parameter List

No.	EEP	LABEL	Adjustment Item	Mode	Range		Initial	
483	1E3H	HUCENMP1	PbPr Hue Center 1	(PbPr)	0~3	0~3H	3	3H
484	1E4H	HUCENLP1	(MSB), (LSB)		0~1023	0~3FFH	870	366H
485	1E5H	HUWP1	PbPr Hue Width 1	(PbPr)	0~255	0~FFH	110	6EH
486	1E6H	HUCLPP1	PbPr Hue Clip 1 0: -128, 128: 0, 255: +127	(PbPr)	0~255	0~FFH	128	80H
487	1E7H	HUKP1	PbPr Hue Slope 1 (±127)	(PbPr)	0~255	0~FFH	52	34H
488	1E8H	HUCENMP2	PbPr Hue Center 2	(PbPr)	0~3	0~3H	1	1H
489	1E9H	HUCENLP2	(MSB), (LSB)		0~1023	0~3FFH	390	186H
490	1EAH	HUWP2	PbPr Hue Width 2 45~128	(PbPr)	0~255	0~FFH	128	80H
491	1EBH	HUCLPP2	PbPr Hue Clip 2 0: -128, 128: 0, 255: +127	(PbPr)	0~255	0~FFH	128	80H
492	1ECH	HUKP2	PbPr Hue Slope 2 (±127)	(PbPr)	0~255	0~FFH	32	20H
493	1EDH	HUCENMP3	PbPr Hue Center 3	(PbPr)	0~3	0~3H	2	2H
494	1EEH	HUCENLP3	(MSB), (LSB)		0~1023	0~3FFH	84	54H
495	1EFH	HUWP3	PbPr Hue Width 3	(PbPr)	0~255	0~FFH	255	FFH
496	1F0H	HUCLPP3	PbPr Hue Clip 3 0: -128, 128: 0, 255: +127	(PbPr)	0~255	0~FFH	133	85H
497	1F1H	HUKP3	PbPr Hue Slope 3 (±127)	(PbPr)	0~255	0~FFH	64	40H
498	1F2H	HUCENMP4	PbPr Hue Center 4	(PbPr)	0~3	0~3H	3	3H
499	1F3H	HUCENLP4	(MSB), (LSB)		0~1023	0~3FFH	834	342H
500	1F4H	HUWP4	PbPr Hue Width 4	(PbPr)	0~255	0~FFH	255	FFH
501	1F5H	HUCLPP4	PbPr Hue Clip 4 0: -128, 128: 0, 255: +127	(PbPr)	0~255	0~FFH	128	80H
502	1F6H	HUKP4	PbPr Hue Slope 4 (±127)	(PbPr)	0~255	0~FFH	64	40H
503	1F7H	HUCENMP5	PbPr Hue Center 5	(PbPr)	0~3	0~3H	1	1H
504	1F8H	HUCENLP5	(MSB), (LSB)		0~1023	0~3FFH	500	1F4H
505	1F9H	HUWP5	PbPr Hue Width 5	(PbPr)	0~255	0~FFH	100	64H
506	1FAH	HUCLPP5	PbPr Hue Clip 5 0: -128, 128: 0, 255: +127	(PbPr)	0~255	0~FFH	128	80H
507	1FBH	HUKP5	PbPr Hue Slope 5 (±127)	(PbPr)	0~255	0~FFH	33	21H
508	1FCH	HUCENMP6	PbPr Hue Center 6	(PbPr)	0~3	0~3H	1	1H
509	1FDH	HUCENLP6	(MSB), (LSB)		0~1023	0~3FFH	307	133H
510	1FEH	HUWP6	PbPr Hue Width 6	(PbPr)	0~255	0~FFH	85	55H
511	1FFH	HUCLPP6	PbPr Hue Clip 6 0: -128, 128: 0, 255: +127	(PbPr)	0~255	0~FFH	128	80H
512	200H	HUKP6	PbPr Hue Slope 6 (±127)	(PbPr)	0~255	0~FFH	47	2FH
513	201H	HUCENMP7	PbPr Auto Color Hue Center 7	(PbPr)	0~3	0~3H	1	1H
514	202H	HUCENLP7	(MSB), (LSB)		0~1023	0~3FFH	392	188H
515	203H	HUWP7	PbPr Hue Width 7	(PbPr)	0~255	0~FFH	85	55H
516	204H	HUCLPP7	PbPr Hue Clip 7 0: -128, 128: 0, 255: +127	(PbPr)	0~255	0~FFH	128	80H
517	205H	HUKP7	PbPr Hue Slope 7 (±127)	(PbPr)	0~255	0~FFH	47	2FH

III. ASSEMBLED P.W.B. ADJUSTMENT

Table 1. I²C Parameter List

No.	EEP	LABEL	Adjustment Item	Mode	Range		Initial	
518	206H	SACENMP0	PbPr Saturation Hue Center 0	(PbPr)	0~3	0~3H	0	0H
519	207H	SACENLP0	(MSB), (LSB)		0~1023	0~3FFH	128	80H
520	208H	SAWP0	PbPr Saturation Hue Width 0	(PbPr)	0~255	0~FFH	128	80H
521	209H	SACLPP0	PbPr Saturation Clip 0 0: -128, 128: 0, 255: +127	(PbPr)	0~255	0~FFH	128	80H
522	20AH	SAKP0	PbPr Saturation Slope 0	(PbPr)	0~255	0~FFH	64	40H
523	20BH	SACENMP1	PbPr Saturation Hue Center 1	(PbPr)	0~3	0~3H	1	1H
524	20CH	SACENLP1	(MSB), (LSB)		0~1023	0~3FFH	323	143H
525	20DH	SAWP1	PbPr Saturation Hue Width 1	(PbPr)	0~255	0~FFH	255	FFH
526	20EH	SACLPP1	PbPr Saturation Clip 1 0: -128, 128: 0, 255: +127	(PbPr)	0~255	0~FFH	132	84H
527	20FH	SAKP1	PbPr Saturation Slope 1	(PbPr)	0~255	0~FFH	64	40H
528	210H	SACENMP2	PbPr Saturation Hue Center 2	(PbPr)	0~3	0~3H	1	1H
529	211H	SACENLP2	(MSB), (LSB)		0~1023	0~3FFH	498	1F2H
530	212H	SAWP2	PbPr Saturation Hue Width 2	(PbPr)	0~255	0~FFH	255	FFH
531	213H	SACLPP2	PbPr Saturation Clip 2 0: -128, 128: 0, 255: +127	(PbPr)	0~255	0~FFH	128	80H
532	214H	SAKP2	PbPr Saturation Slope 2	(PbPr)	0~255	0~FFH	64	40H
533	215H	SACENMP3	PbPr Saturation Hue Center 3	(PbPr)	0~3	0~3H	2	2H
534	216H	SACENLP3	(MSB), (LSB)		0~1023	0~3FFH	643	283H
535	217H	SAWP3	PbPr Saturation Hue Width 3	(PbPr)	0~255	0~FFH	255	FFH
536	218H	SACLPP3	PbPr Saturation Clip 3 0: -128, 128: 0, 255: +127	(PbPr)	0~255	0~FFH	120	78H
537	219H	SAKP3	PbPr Saturation Slope 3	(PbPr)	0~255	0~FFH	64	40H
538	21AH	SACENMP4	PbPr Saturation Hue Center 4	(PbPr)	0~3	0~3H	3	3H
539	21BH	SACENLP4	(MSB), (LSB)		0~1023	0~3FFH	834	342H
540	21CH	SAWP4	PbPr Saturation Hue Width 4	(PbPr)	0~255	0~FFH	128	80H
541	21DH	SACLPP4	PbPr Saturation Clip 4 0: -128, 128: 0, 255: +127	(PbPr)	0~255	0~FFH	115	73H
542	21EH	SAKP4	PbPr Saturation Slope 4	(PbPr)	0~255	0~FFH	64	40H
543	21FH	SACENMP5	PbPr Saturation Hue Center 5	(PbPr)	0~3	0~3H	3	3H
544	220H	SACENLP5	(MSB), (LSB)		0~1023	0~3FFH	1004	3ECH
545	221H	SAWP5	PbPr Saturation Hue Width 5	(PbPr)	0~255	0~FFH	128	80H
546	222H	SACLPP5	PbPr Saturation Clip 5 0: -128, 128: 0, 255: +127	(PbPr)	0~255	0~FFH	128	80H
547	223H	SAKP5	PbPr Saturation Slope 5	(PbPr)	0~255	0~FFH	64	40H
548	224H	SACENMP6	PbPr Saturation Hue Center 6	(PbPr)	0~3	0~3H	3	3H
549	225H	SACENLP6	(MSB), (LSB)		0~1023	0~3FFH	931	3A3H
550	226H	SAWP6	PbPr Saturation Hue Width 6	(PbPr)	0~255	0~FFH	140	8CH
551	227H	SACLPP6	PbPr Saturation Clip 6 0: -128, 128: 0, 255: +127	(PbPr)	0~255	0~FFH	128	80H
552	228H	SAKP6	PbPr Saturation Slope 6	(PbPr)	0~255	0~FFH	42	2AH
553	229H	SACENMP7	PbPr Saturation Hue Center 7	(PbPr)	0~3	0~3H	2	2H
554	22AH	SACENLP7	(MSB), (LSB)		0~1023	0~3FFH	634	27AH
555	22BH	SAWP7	PbPr Saturation Hue Width 7	(PbPr)	0~255	0~FFH	120	78H
556	22CH	SACLPP7	PbPr Saturation Clip 7 0: -128, 128: 0, 255: +127	(PbPr)	0~255	0~FFH	128	80H
557	22DH	SAKP7	PbPr Saturation Slope 7	(PbPr)	0~255	0~FFH	33	21H
558	22EH	REAL	Not Use	PC	0~1	0~1H	0	0H

III. ASSEMBLED P.W.B. ADJUSTMENT

Table 1. I²C Parameter List

No.	EEP	LABEL	Adjustment Item	Mode	Range		Initial	
559	22FH	FRMLEV0	Frame Brightness	Single	0~255	0~FFH	90	5AH
560	230H	FRMLEV1		Multi	0~255	0~FFH	90	5AH
561	231H	FRMLEV2	Not Use	PC	0~255	0~FFH	90	5AH
562	232H	FHMINMSB	Not Use	PC	0~255	0~FFH	0x27	
563	233H	FHMINLSB	Not Use	PC	0		0x10	
564	234H	FHMAXMSB	Not Use	PC	0~255	0~FFH	0x08	
565	235H	FHMAXLSB	Not Use	PC	0		0x99	
566	236H	FVMINMSB	Not Use	PC	0~255	0~FFH	0x3d	
567	237H	FVMINLSB	Not Use	PC	0		0x09	
568	238H	FVMAXMSB	Not Use	PC	0~255	0~FFH	0x21	
569	239H	FVMAXLSB	Not Use	PC	0		0xac	
570	23AH	LMINMSB	Not Use	PC	0~255	0~FFH	0x01	
571	23BH	LMINLSB	Not Use	PC	0		0x9d	
572	23CH	LMAXMSB	Not Use	PC	0~255	0~FFH	0x05	
573	23DH	LMAXLSB	Not Use	PC	0		0x14	
574	23EH	HRNG	Not Use	PC	0~255	0~FFH	128	80H
575	23FH	VRNG	Not Use	PC	0~255	0~FFH	128	80H
576	240H	LRNG	Not Use	PC	0~255	0~FFH	2	2H
577	241H	NGVS	Not Use	PC	0~255	0~FFH	16	FH
578	242H	HDCPV	HDCP V Change	1080I/720P (PC/TV)	0~255	0~FFH	0	0H
579	243H	WCKMIN	Not Use	PC	0~255	0~FFH	20	32H
580	244H	WCKMAX	Not Use	PC	0~255	0~FFH	82	52H
581	245H	DSWCK	Not Use	PC	0~255	0~FFH	80	50H
582	246H	PCCLPS0	Not Use	PC	0~255	0~FFH	2	2H
583	247H	PCCLPS1	Not Use	PC (1080I)	0~255	0~FFH	2	2H
584	248H	PCCLPS2	Not Use	PC (720P)	0~255	0~FFH	2	2H
585	249H	PCCLPW0	Not Use	PC	0~255	0~FFH	8	8H
586	24AH	PCCLPW1	Not Use	PC (1080I)	0~255	0~FFH	8	8H
587	24BH	PCCLPW2	Not Use	PC (720P)	0~255	0~FFH	8	8H
588	24CH	MTBCVP	Not Use	PC (1080i/720p)	0~255	0~FFH	100	64H
589	24DH	OEDLYOFS	Not Use	PC	0~255	0~FFH	128	80H
590	24EH	SDPLLDIV	Not Use	PC	0~63	0~4FH	43	2BH
591	24FH	CLKXODIV	Not Use	PC	0~31	0~1FH	28	1CH
592	250H	HPREOFS~P0	Not Use	PC	0~255	0~FFH	128	40H
593	251H	HPREOFS~P1	Not Use	PC	0~255	0~FFH	128	80H
594	252H	HPREOFS~P2	Not Use	PC	0~255	0~FFH	128	80H
595	253H	HPREMD	Not Use	PC	0~3	0~3H	1	1H
596	254H	HPREDS	Not Use	PC	0~3	0~3H	0	0H
597	255H	VPREON	Not Use	PC	0~1	0~1H	0	0H
598	256H	TVPLLSW	TV PLL Switch 0: External, 1: Internal	TV	0~1	0~1H	0	0H
599	257H	VCOMAX	VCO Maximum Frequency (500MHz±127MHz)		0~255	0~FFH	128	80H
600	258H	PFDSW	PFD Switch Frequency (400MHz±127MHz)		0~255	0~FFH	38	26H
601	259H	PFD0	PFD 0		0~7	0~7H	2	2H
602	25AH	PFD1	PFD 1		0~7	0~7H	3	3H

III. ASSEMBLED P.W.B. ADJUSTMENT

Table 1. I²C Parameter List

No.	EEP	LABEL	Adjustment Item	Mode	Range		Initial	
603	25BH	BSSP	Black Changing Speed 0: fast, 63:late	TV	0~63	0~4FH	2	2H
604	25CH	BSSTEP	Black Stretch Adjustment Step 0:direct 1~3:1~3step	TV	0~3	0~3H	0	0H
605	25DH	BSSTART	Black Stretch Start Level	TV	0~255	0~FFH	110	6EH
606	25EH	BSAPL0	Black Stretch Start APL	TV	0~255	0~FFH	20	14H
607	25FH	BSAPL1	Black Stretch Change Point 1 APL	TV	0~255	0~FFH	35	23H
608	260H	BSAPL2	Black Stretch Change Point 2 APL	TV	0~255	0~FFH	75	4BH
609	261H	BSAPL3	Black Stretch Change Point 3 APL	TV	0~255	0~FFH	100	64H
610	262H	BSAPL4	Black Stretch Change Point 4 APL	TV	0~255	0~FFH	115	73H
611	263H	BSGAIN0	Black Stretch Start Gain	TV	0~63	0~3FH	0	0H
612	264H	BSGAIN1	Black Stretch Change Point 1 Gain	TV	0~63	0~3FH	7	7H
613	265H	BSGAIN2	Black Stretch Change Point 2 Gain	TV	0~63	0~3FH	15	FH
614	266H	BSGAIN3	Black Stretch Change Point 3 Gain	TV	0~63	0~3FH	20	14H
615	267H	BSGAIN4	Black Stretch Change Point 4 Gain	TV	0~63	0~3FH	20	14H
616	268H	BSGAINR	Black Stretch Gain Adjustment	TV	0~63	0~3FH	-	-
617	269H	BCSTEP	Black Correction Adjustment Step 0:direct 1~3:1~3step	TV	0~3	0~3H	1	1H
618	26AH	BCAPL0	Black Correction Start APL	TV	0~255	0~FFH	100	64H
619	26BH	BCAPL1	Black Correction Changing Point 1 APL	TV	0~255	0~FFH	115	73H
620	26CH	BCAPL2	Black Correction Changing Point 2 APL	TV	0~255	0~FFH	130	82H
621	26DH	BCAPL3	Black Correction Changing Point 3 APL	TV	0~255	0~FFH	145	91H
622	26EH	BCAPL4	Black Correction Changing Point 4 APL	TV	0~255	0~FFH	160	A0H
623	26FH	BCLEV0	Black Stretch Start Correction Level	TV	0~63	0~3FH	0	0H
624	270H	BCLEV1	Black Correction Changing Point 1 Level	TV	0~63	0~3FH	5	5H
625	271H	BCLEV2	Black Correction Changing Point 2 Level	TV	0~63	0~3FH	10	AH
626	272H	BCLEV3	Black Correction Changing Point 3 Level	TV	0~63	0~3FH	15	FH
627	273H	BCLEV4	Black Correction Changing Point 4 Level	TV	0~63	0~3FH	25	19H
628	274H	BCLEVR	Black Correction Level Adjustment	TV	0~63	0~3FH	-	-
629	275H	BCCONST	Black Correction Contrast Control Start Level	TV	0~63	0~3FH	0	0H
630	276H	BCCONMAX	Black Correction Contrast Control Maximum Value	TV	0~63	0~3FH	5	5H
631	277H	BCCON	Black Correction Contrast Control Value	TV	0~63	0~3FH	-	-
632	278H	GDOWNSP	Gain Down Speed STEP = (SP+1)*8	TV	0~255	0~FFH	100	64H
633	279H	GUPSP	Gain Up Speed STEP = (SP+1)*8	TV	0~255	0~FFH	63	3FH
634	27AH	ACW	Auto Contrast ON/OFF/Width	TV	0~63	0~3FH	63	3FH
635	27BH	DCW	Dynamic Contrast ON/OFF/Width	TV	0~127	0~7FH	16	10H
636	27CH	DCBTMW	Lower APL Dynamic Contrast Adjustment Width	TV	0~127	0~7FH	0	0H
637	27DH	MAXHIGH0	Auto Contrast Maximum Upper Limit	TV	0~255	0~FFH	223	DFH
638	27EH	MAXLOW0	Auto Contrast Maximum Lower Limit	TV	0~255	0~FFH	217	D9H
639	27FH	MAXHIGH1	Dynamic Contrast Maximum Upper Limit	TV	0~255	0~FFH	223	DFH
640	280H	MAXLOW1	Dynamic Contrast Maximum Lower Limit	TV	0~255	0~FFH	150	96H
641	281H	APLHIGH	High APL Threshold	TV	0~255	0~FFH	130	82H
642	282H	APLLOW	Low APL Threshold	TV	0~255	0~FFH	90	5AH
643	283H	APLBTM	Lower APL Threshold	TV	0~255	0~FFH	70	46H

III. ASSEMBLED P.W.B. ADJUSTMENT

Table 1. I²C Parameter List

No.	EEP	LABEL	Adjustment Item	Mode	Range		Initial	
644	284H	DGCMSB	Dynamic Contrast Gain Control Offset (MSB)	TV	0~255	0~FFH	-	-
645	285H	DGCLSB	Dynamic Contrast Gain Control Offset (LSB)	TV	0~255	0~FFH	-	-
646	286H	DCCOLST	Dynamic Contrast Color Correction Start Gain	TV	0~127	0~7FH	63	3FH
647	287H	DCCOLMAX	Dynamic Contrast Color Correction Max	TV	0~63	0~3FH	25	19H
648	288H	DCCOL	Dynamic Contrast Color Correction	TV	0~63	0~3FH	-	-
649	289H	DCVESTART	Dynamic Contrast Vertical Enhance Correction Start Gain	TV	0~255	0~FFH	56	38H
650	28AH	DCVEEND	Dynamic Contrast Vertical Enhance Correction End Gain	TV	0~255	0~FFH	63	3FH
651	28BH	DCHESTART	Dynamic Contrast Horizontal Enhance Correction Start Gain	TV	0~255	0~FFH	56	38H
652	28CH	DCHEEND	Dynamic Contrast Horizontal Enhance Correction End Gain	TV	0~255	0~FFH	64	40H
653	28DH	DCVE	Dynamic Contrast Vertical Enhance Correction	TV	0~255	0~FFH	-	-
654	28EH	DCHE	Dynamic Contrast Horizontal Enhance Correction	TV	0~255	0~FFH	-	-
655	28FH	DGSTEP	Dynamic Gamma Change	TV	0~128	0~80H	5	5H
656	290H	DGAPL0	Dynamic Gamma APL Point 0	TV	0~255	0~FFH	0	0H
657	291H	DGAPL1	Dynamic Gamma APL Point 1	TV	0~255	0~FFH	30	1EH
658	292H	DGAPL2	Dynamic Gamma APL Point 2	TV	0~255	0~FFH	92	5CH
659	293H	DGAPL3	Dynamic Gamma APL Point 3	TV	0~255	0~FFH	125	7DH
660	294H	DGAPL4	Dynamic Gamma APL Point 4	TV	0~255	0~FFH	160	A0H
661	295H	DGAPL5	Dynamic Gamma APL Point 5	TV	0~255	0~FFH	215	D7H
662	296H	DGAPL0GM	Dynamic Gamma APL Point 0 Gamma Select	TV	0~2	0~2H	0	0H
663	297H	DGAPL1GM	Dynamic Gamma APL Point 1 Gamma Select	TV	0~2	0~2H	1	1H
664	298H	DGAPL2GM	Dynamic Gamma APL Point 2 Gamma Select	TV	0~2	0~2H	1	1H
665	299H	DGAPL3GM	Dynamic Gamma APL Point 3 Gamma Select	TV	0~2	0~2H	1	1H
666	29AH	DGAPL4GM	Dynamic Gamma APL Point 4 Gamma Select	TV	0~2	0~2H	2	2H
667	29BH	DGAPL5GM	Dynamic Gamma APL Point 5 Gamma Select	TV	0~2	0~2H	2	2H
668	29CH	GM08	Gamma 8 Adjustment (Dark)	TV	0~128	0~80H	128	80H
669	29DH	GM07	Gamma 7 Adjustment (Dark)	TV	0~255	0~FFH	224	E0H
670	29EH	GM06	Gamma 6 Adjustment (Dark)	TV	0~255	0~FFH	192	C0H
671	29FH	GM05	Gamma 5 Adjustment (Dark)	TV	0~255	0~FFH	160	A0H
672	2A0H	GM04	Gamma 4 Adjustment (Dark)	TV	0~255	0~FFH	128	80H
673	2A1H	GM03	Gamma 3 Adjustment (Dark)	TV	0~255	0~FFH	96	60H
674	2A2H	GM02	Gamma 2 Adjustment (Dark)	TV	0~255	0~FFH	64	40H
675	2A3H	GM01	Gamma 1 Adjustment (Dark)	TV	0~255	0~FFH	32	20H
676	2A4H	GM00	Gamma 0 Adjustment (Dark)	TV	0~255	0~FFH	0	0H

III. ASSEMBLED P.W.B. ADJUSTMENT

Table 1. I²C Parameter List

No.	EEP	LABEL	Adjustment Item	Mode	Range		Initial	
677	2A5H	GM18	Gamma 8 Adjustment (Normal)	TV	0~128	0~FFH	128	80H
678	2A6H	GM17	Gamma 7 Adjustment (Normal)	TV	0~255	0~FFH	228	E4H
679	2A7H	GM16	Gamma 6 Adjustment (Normal)	TV	0~255	0~FFH	200	C8H
680	2A8H	GM15	Gamma 5 Adjustment (Normal)	TV	0~255	0~FFH	171	ABH
681	2A9H	GM14	Gamma 4 Adjustment (Normal)	TV	0~255	0~FFH	141	8DH
682	2AAH	GM13	Gamma 3 Adjustment (Normal)	TV	0~255	0~FFH	106	6AH
683	2ABH	GM12	Gamma 2 Adjustment (Normal)	TV	0~255	0~FFH	74	4AH
684	2ACH	GM11	Gamma 1 Adjustment (Normal)	TV	0~255	0~FFH	34	22H
685	2ADH	GM10	Gamma 1 Adjustment (Normal)	TV	0~255	0~FFH	0	0H
686	2AEH	GM28	Gamma 8 Adjustment (Light)	TV	0~128	0~80H	128	80H
687	2AFH	GM27	Gamma 7 Adjustment (Light)	TV	0~255	0~FFH	224	E0H
688	2B0H	GM26	Gamma 6 Adjustment (Light)	TV	0~255	0~FFH	193	C1H
689	2B1H	GM25	Gamma 5 Adjustment (Light)	TV	0~255	0~FFH	155	9BH
690	2B2H	GM24	Gamma 4 Adjustment (Light)	TV	0~255	0~FFH	123	7BH
691	2B3H	GM23	Gamma 3 Adjustment (Light)	TV	0~255	0~FFH	90	5AH
692	2B4H	GM22	Gamma 2 Adjustment (Light)	TV	0~255	0~FFH	55	37H
693	2B5H	GM21	Gamma 1 Adjustment (Light)	TV	0~255	0~FFH	24	18H
694	2B6H	GM20	Gamma 0 Adjustment (Light)	TV	0~255	0~FFH	0	0H
695	2B7H	ATCSL	ATC Picture Slice Level		0~255	0~FFH	102	66H
696	2B8H	ATCHDLY	ATC Horizontal Picture Detection Offset		0~255	0~FFH	-	-
697	2B9H	ATCLPF	ATC Max/Min Detection LPF Switch		0~3	0~3H	3	3H
698	2BAH	SHSTM	Horizontal Picture Start Position (MSB)		0~15	0~FH	-	-
699	2BBH	SHSTL	Horizontal Picture Start Position (LSB)					
700	2BCH	SHEDM	Horizontal Picture End Position (MSB)		0~15	0~FH	-	-
701	2BDH	SHEDL	Horizontal Picture End Position (LSB)					
702	2BEH	SVSTM	Vertical Picture Start Position (MSB)		0~7	0~7H	-	-
703	2BFH	SVSTL	Vertical Picture Start Position (LSB)					
704	2C0H	SVEDM	Vertical Picture End Position (MSB)		0~7	0~7H	-	-
705	2C1H	SVEDL	Vertical Picture End Position (LSB)					
706	2C2H	VHPHSM	Vsync~Hsync Phase Detection (MSB)		0~31	0~1FH	-	-
707	2C3H	VHPHSL	Vsync~Hsync Phase Detection (LSB)					
708	2C4H	INFOWINON	Information Window ON/OFF 0:PCWIN 1:INFORMATION MODE		0~1	0~1H	0	0H
709	2C5H	INFOVFIL	Information Window Filter ON/OFF 0:OFF 1:ON	INFOWIN	0~1	0~1H	0	0H
710	2C6H	INFOVPOS	Information Window Vertical Position Offset	INFOWIN	0~255	0~FFH	128	80H
711	2C7H	INFOHPOS	Information Window Horizontal Position Offset	INFOWIN	0~255	0~FFH	128	80H
712	2C8H	IMSHPHS0	Information Window Horizontal Sync Horizontal Phase	INFOWIN ANT	0~255	0~FFH	128	80H
713	2C9H	IMSHPHS1		INFOWIN 480i	0~255	0~FFH	124	7CH
714	2CAH	IMSHPHS2		INFOWIN 1080i	0~255	0~FFH	128	80H
715	2CBH	MBIW	Information Window Brightness Offset	INFOWIN	0~255	0~FFH	128	80H
716	2CCH	MCIW	Information Window Contrast Offset	INFOWIN	0~255	0~FFH	103	67H
717	2CDH	INFOCOL	Information Window Color Adjustment	INFOWIN	0~127	0~7FH	90	5AH
718	2CEH	INFOTINT	Information Window Tint Adjustment	INFOWIN	0~255	0~FFH	138	8AH
719	2CFH	IMSDPLLDIV	Information Window Clock	INFOWIN	0~63	0~3FH	47	2FH
720	2D0H	POEINV	Parity Signal Invert 0:Sil861 1:Sil169		0~1	0~1H	1	1H
721	2D1H	EEPRENEW	EEPROM Initial		0~255	0~FFH	-	-
722	2D2H	EEPINIT	EEPROM ALL Initial		0~255	0~FFH	-	-

III. ASSEMBLED P.W.B. ADJUSTMENT

Table 2. **SETTING FOR DELIVERY (FACTORY RESET)**

Function	Initial Data/Condition	Condition	LC 37
NTSC Channel (Main, Sub)	03Channel		X
ATSC Channel	None (3-1ch)	On DTV	-
Input Mode	Ant A		X
Sleep Timer	Not Registered		X
Favorite Channels	Not Registered		X
Multi Window Mode	Off		X
PIP/POP/SPLIT	POP (Middle Right)	Main; NTSC or 480i or Ant C Sub; NTSC or 480i or 1080i Ant C	X
Freeze Mode	POP Main Freeze (Middle Right)	(Same as above)	X
	POP Sub Freeze (Middle Right)	(Same as above)	-
Surf Mode	Surf 12	On Ant mode	X
	Surf 3	On Ant mode	-
Strobe Mode	Strobe 3	On NTSC Signal	X
Master Volume	20 Step		X
Video			
Picture Mode (Day/Night)	Day		X
Contrast	100%	Picture Mode “Day”	X
Brightness	50%	Picture Mode “Day”	X
Color	50%	Picture Mode “Day”	X
Tint	50%	Picture Mode “Day”	X
Sharpness	50%	Picture Mode “Day”	X
Color Temperature (High/ Medium/ Standard/ Black&White)	High	Picture Mode “Day”	X
Black Enhancement (High/Middle/Low/Off)	High	Picture Mode “Day”	X
Edge Enhancement (High/Middle/Low/Off)	High	Picture Mode “Day”	X
Color Management	Off		X
Magenta	71%		X
Red	70%		X
Yellow	50%		X
Green	50%		X
Cyan	40%		X
Blue	76%		X
Color Decoding	RGB		X
Red	50%		X
Green	50%		X
Color	50%	Picture Mode “Day”	X
Tint	50%	Picture Mode “Day”	X
Auto Color	Off	Picture Mode “Day”	X
Noise Reduction	Low	Picture Mode “Day”	X
Auto Movie Mode	Off	Picture Mode “Day”	X

III. ASSEMBLED P.W.B. ADJUSTMENT

Table 2. **SETTING FOR DELIVERY (FACTORY RESET)**

Function	Initial Data/Condition	Condition	LC 37
Audio			
Treble	50%		X
Bass	63%		X
Balance	50%		X
Sound Enhancement (SRS, BBE, SRS&BBE, Off)	Off		X
Audio Source (Stereo/Mono/SAP)	Stereo		X
Internal Speakers (On, Off Only)	On		-
Internal Speakers (On/Off/TV AS Center)	On		X
Auto Noise Cancel	Off		X
Perfect Volume	Off		X
Loudness	Off		X
DTV Language	English	On DTV	-
Digital Output (Dolby Digital/PCM)	Dolby Digital	On DTV	-
DRC	On	On DTV	-
Aspect			
16:9 Standard, 16:9 Zoom 4:3 Standard, 4:3 Expanded 4:3 Zoom1, 4:3 Zoom2	4:3 Standard	On Input Signal "NTSC, 480i, 480p"	X
	16:9 Standard	On Input Signal "720p, 1080i"	X
Auto Aspect	Off		X
Vertical Position	0		X
Channel Manager			
Channel Source Antenna/Cable1/Cable2	Antenna		X
Channel Source Antenna/Cable	Antenna	On DTV	-
Signal Meter		On DTV	-
Auto Channel Scan Antenna/Cable1/Cable2	Not Registered		X
Auto Channel Scan Antenna/Cable	Not Registered	On DTV	-
Channel List			
Ant A (NTSC)			
CH ID	Not Registered		X
Scan	2~13CH		X
Lock	Not Registered		X
Ant B (NTSC)			
CH ID	Not Registered		X
Scan	2~13CH		X
Lock	Not Registered		X
Ant C (DTV)			
CH ID	Not Registered	On DTV	-
Scan	Not Registered	On DTV	-
Lock	Not Registered	On DTV	-

III. ASSEMBLED P.W.B. ADJUSTMENT

Table 2. **SETTING FOR DELIVERY (FACTORY RESET)**

Function	Initial Data/Condition	Condition	LC 37
Locks			
Change Access Code	"0000","7777"		X
Engage Lock			
Set Channel Lock	Not Registered		X
Set Input Lock	Not Registered		X
Set Front Panel Lock	Not Registered		X
TV Time Lock			
Start/Stop Time	Not Registered		X
Repeat (Once/Daily/Weekly/Off)	Not Registered		X
Movie Rating	Not Registered		X
TV Rating	Not Registered		X
Canadian Rating (Eng.)	Not Registered		X
Canadian Rating (Frn.)	Not Registered		X
Setup			
Menu Preference			
Menu Language	English		X
Menu Background	Shaded		X
Screen Saver			
Main Picture Moving	Option 1		X
Screen Wipe	–		X
Set The Clock			
Time Zone	PST	On DTV	-
Daylight Savings	Off	On DTV	-
Hour	Not Registered		X
Minutes	Not Registered		X
AM/PM	AM		X
Month	Jan		X
Day	01		X
Year	2003		X
Set The Inputs			
Input 1 Rename	Not Registered (VID1)		X
Input2 Rename	Not Registered (VID1)		X
Input2 Auto Link (Auto/Remote/Off)	Off		X
Input 3 Rename	Not Registered		X
Input 4 Rename	Not Registered		X
Input 5 Rename	Not Registered		X
Color System			
YPBPR1	Auto	On Input Signal	X
YPBPR2	Auto	On Input Signal	X
Black Side Panel	Off		X
Set Event Timer (Event1/2/3/4)	Not Registered		X
Set Closed Caption			
Caption Display	Off		X
Mode (Captions/Text)	Captions		X
Channel (1/2/3/4)	Channel 1		X
Digital Captions			
Service (1/2/3/4/5/6)	1	On DTV	-
Language	(English)	On DTV	-
Font(Default,1/2/3/4/5/6/7/8)	Default	On DTV	-
Size (Small/Standard/Large)	Standard	On DTV	-
Style (Standard/High Visibility)	Standard	On DTV	-

III. ASSEMBLED P.W.B. ADJUSTMENT

Table 2. **SETTING FOR DELIVERY (FACTORY RESET)**

Function		Initial Data/Condition	Condition	LC 37
Setup				
	About Your TV	- (None)		X
	Set Timer Recording (Record1/2/3/4)	Not Registered	On DTV	X
	Set Monitor Out (Monitor/TV Out)	Monitor	On DTV	X
	Upgrades	- (None)	On DTV	X
	Set Stand-by Mode	Off	On DTV	X
IR Blaster		Off		X
Memory Card				
	Bridge Media	Off		X
	Multi Slot	Off	On DTV	-
Built-in DVD		Off		-

IV. POWER P.W.B.

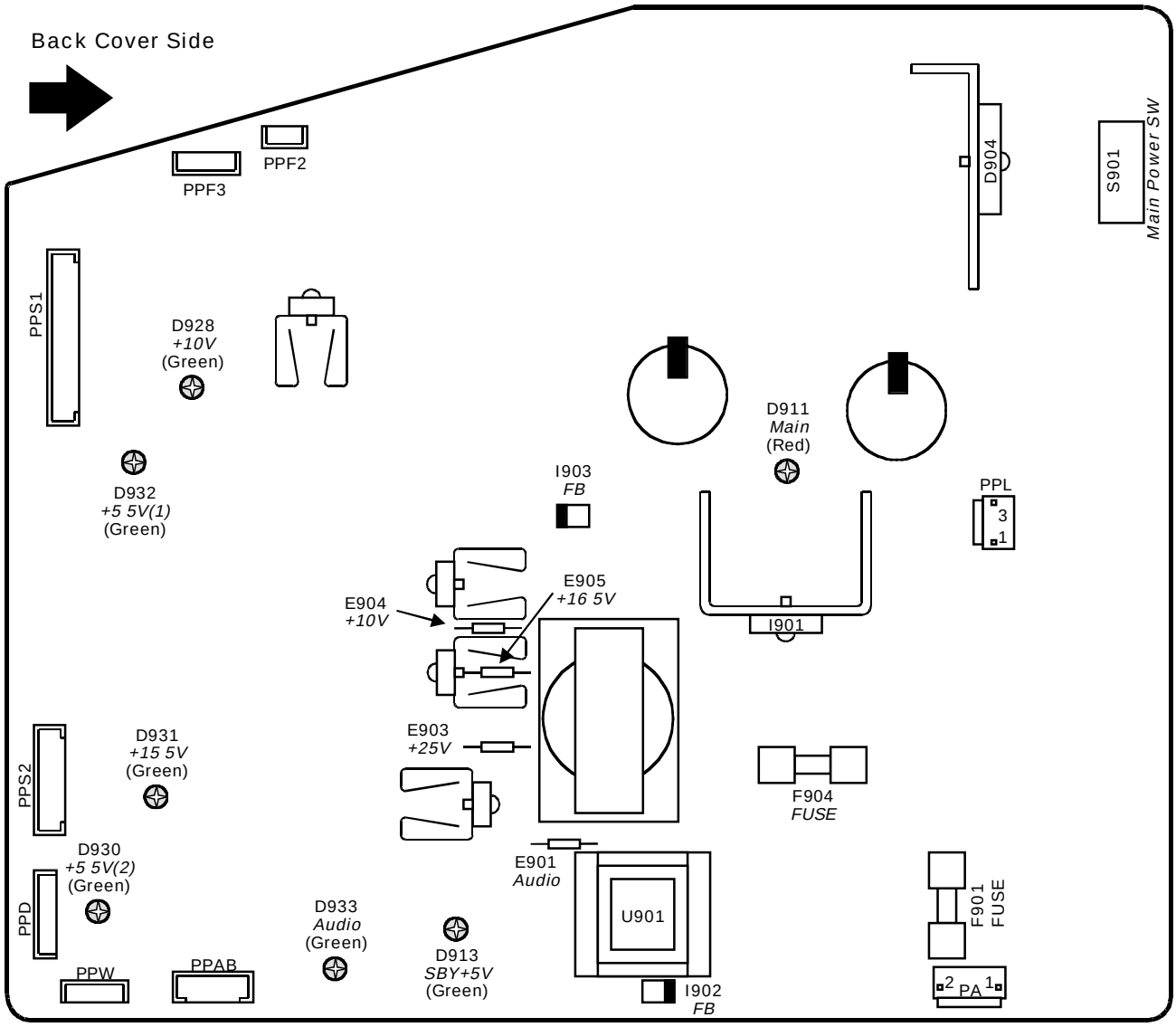

BACK TO ADJUSTMENTS

IV. POWER PWB

1. Power supply

1.1 Output voltage:

No.	Description	Measuring point		Line voltage [V]	
		+ side	- side		
1	SBY+5V	PPS1(12)	PPS1(4)	5.0	+/-0.5
2	SW+15.5V	PPD(1),(2)	PPD(3),(4)	16	+/-1.0
3	SW+10V	PPS1(2),(3)	PPS1(5)	10	+/-0.5
4	SW+5.5V(1)	PPS1(8),(9)	PPS1(6)	5.5	+/-0.3
5	SW+5.5V(2)	PPS1(10),(11)	PPS1(7)	5.5	+/-0.3
6	SW+1.8V	PPS2(1),(2)	PPS2(3),(4)	1.99	+/-0.07
7	SW+35V	PPS1(1)	PPS1(4)	35	+/-2.0
8	AUDIO+29V	PPAB(1)-(3)	PPAB(4)-(6)	31.7	+/-1.0
9	FAN+10V	PPF2(2)	PPF2(3)	10	+/-0.5
10	FAN+12V	PPF3(2)	PPF3(3)-(5)	11.7	+/-0.5
11	LAMPPOWER	PPL(1)	PPL(2)	320	+/-10.0

Measuring conditions

Line voltage: AC108-132V (No.11 is measured with AC120V)
Receive HITACHI circle pattern signal
Brightness …… MAX
Contrast …… MAX.
Preheat at least 5min. before being checked.

(2) Imperfect raster

There should not be any imperfect raster.

Measuring conditions

Supply AC1088V from AC stabilizing power supply
Receive HITACHI circle pattern signal.
Contrast and Brightness: Factory Reset condition

BACK TO ADJUSTMENTS

1.2 Protection Circuit Block Daigram (Power Supply)

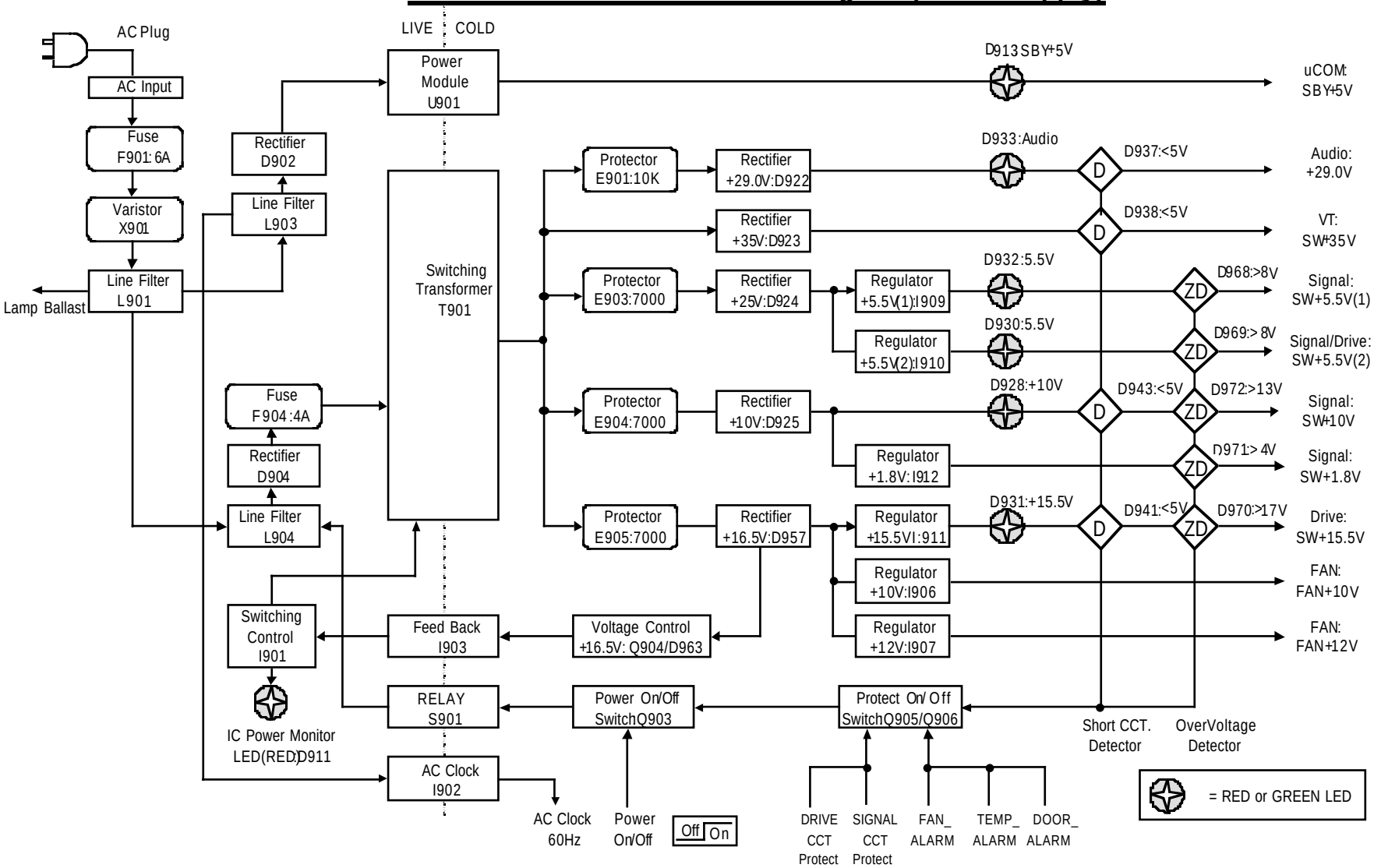

TROUBLE SHOOTING

1. No raster and no power (How to check LED's Diagnosis)

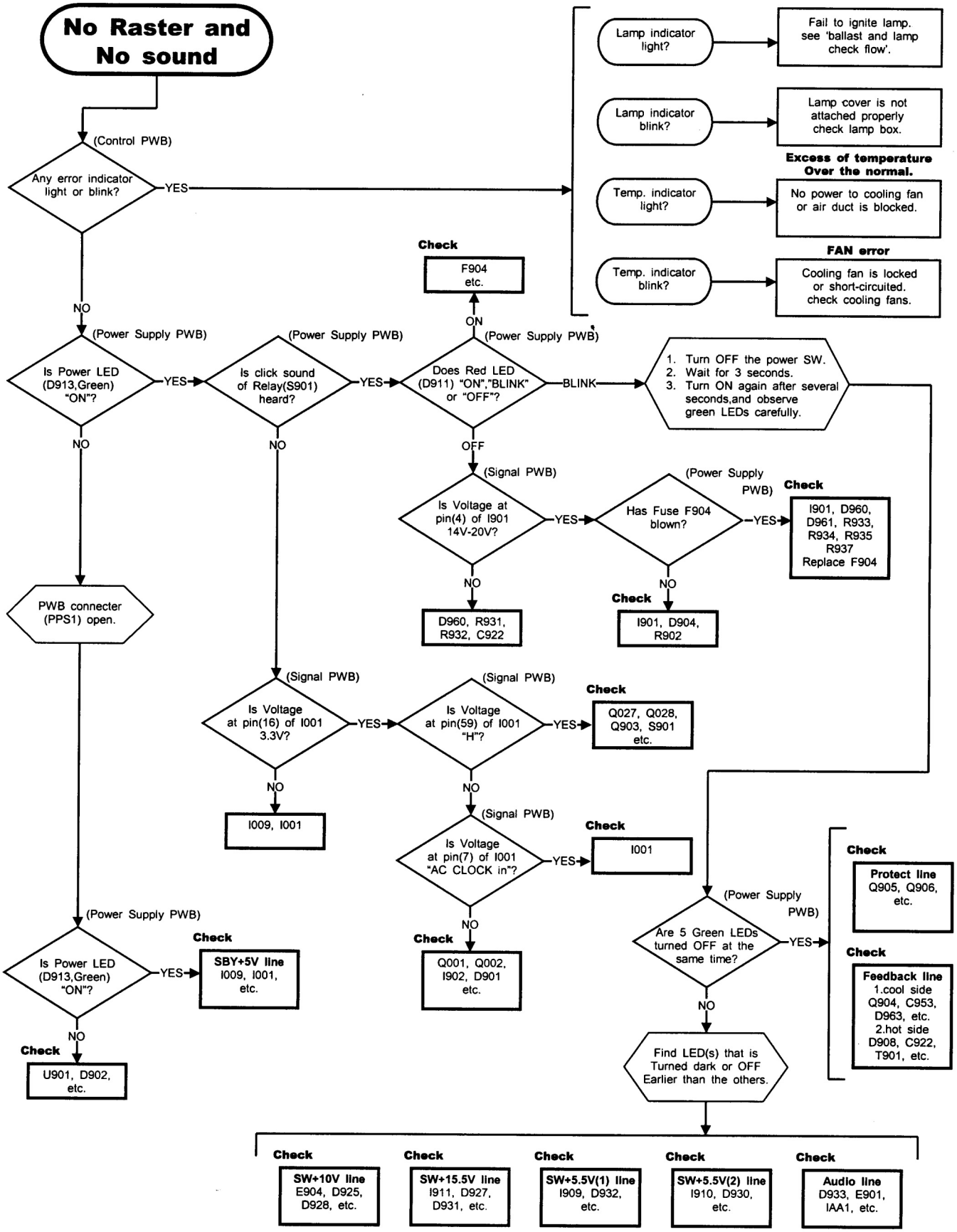

BACK TO ADJUSTMENTS

VI. DC VOLTAGES

Signal 1

Symbol	Pin No.	V(DC)	Pin No.	V(DC)	Pin No.	V(DC)	Pin No.	V(DC)
I001	1	0.18	26	1.63	51	3.20	76	2.98
	2	1.32	27	0.03	52	3.09	77	2.20
	3	3.26	28	4.61	53	3.08	78	3.28
	4	3.26	29	4.68	54	2.80	79	3.30
	5	0.00	30	4.59	55	3.08	80	0.00
	6	3.26	31	4.51	56	0.03	81	3.06
	7	1.56	32	0.00	57	0.03	82	3.26
	8	0.00	33	0.02	58	3.23	83	3.42
	9	0.00	34	0.02	59	3.21	84	3.42
	10	3.26	35	0.02	60	3.22	85	3.25
	11	3.26	36	0.02	61	3.23	86	3.25
	12	3.27	37	3.26	62	0.09	87	1.54
	13	1.61	38	0.02	63	0.03	88	0.02
	14	0.00	39	3.21	64	3.35	89	3.26
	15	1.61	40	3.21	65	3.22	90	3.26
	16	3.27	41	0.02	66	0.10	91	0.08
	17	0.01	42	3.26	67	0.03	92	1.66
	18	3.26	43	3.26	68	0.03	93	1.69
	19	3.20	44	3.23	69	3.21	94	3.27
	20	0.01	45	3.35	70	0.03	95	0.19
	21	0.01	46	0.03	71	0.03	96	1.37
	22	0.01	47	0.01	72	0.03	97	2.09
	23	2.87	48	3.30	73	3.22	98	0.00
	24	3.27	49	0.02	74	3.22	99	4.96
	25	0.02	50	0.00	75	0.03	100	2.03

Symbol	Pin No.	V(DC)
I002	1	0.0
	2	0.0
	3	0.0
	4	3.3
	5	3.3

Symbol	Pin No.	V(DC)	Pin No.	V(DC)
I003	1	0.0	5	4.7
	2	0.0	6	4.8
	3	0.0	7	0.0
	4	0.0	8	5.1

Symbol	Pin No.	V(DC)	Pin No.	V(DC)
I004	1	0.1	9	5.1
	2	0.0	10	5.1
	3	3.3	11	5.2
	4	3.3	12	0.2
	5	3.3	13	0.1
	6	0.0	14	0.1
	7	0.0	15	0.0
	8	0.0	16	5.2

Symbol	Pin No.	V(DC)	Pin No.	V(DC)
I005	1	2.6	9	2.6
	2	2.6	10	2.6
	3	0.4	11	0.0
	4	0.4	12	0.0
	5	0.4	13	0.0
	6	4.7	14	4.7
	7	0.4	15	4.8
	8	0.0	16	5.1

Symbol	Pin No.	V(DC)	Pin No.	V(DC)
I008	1	4.3	9	8.9
	2	5.2	10	0.1
	3	5.1	11	0.1
	4	5.1	12	5.2
	5	5.2	13	4.3
	6	0.0	14	5.1
	7	0.0	15	5.2
	8	0.0	16	8.9

Symbol	Pin No.	V(DC)	Pin No.	V(DC)
I011	1	0.0	9	0.1
	2	4.6	10	5.2
	3	5.2	11	5.2
	4	5.2	12	5.1
	5	0.2	13	0.1
	6	0.0	14	0.0
	7	5.1	15	5.1
	8	0.0	16	5.2

VI. DC VOLTAGES

Signal 1

Symbol	Pin No.	V(DC)	Pin No.	V(DC)
U301	1	2.10	15	0.00
	2	5.49	16	2.43
	3	0.00	17	2.10
	4	4.64	18	2.12
	5	4.51	19	1.79
	6	0.01	20	0.00
	7	4.98	21	0.05
	8	0.00	22	0.05
	9	32.59	23	0.09
	10	0.02	24	0.03
	11	0.01	25	0.00
	12	0.00	26	4.13
	13	8.74	27	4.14
	14	0.61	--	

Symbol	Pin No.	V(DC)
I009	1	5.2
	2	0.0
	3	1.3
	4	3.3
	5	5.2

Symbol	Pin No.	V(DC)	Pin No.	V(DC)
I010	1	5.2	11	5.1
	2	3.2	12	5.1
	3	0.0	13	0.0
	4	3.2	14	4.5
	5	4.7	15	4.6
	6	2.9	16	5.0
	7	0.0	17	0.0
	8	3.3	18	4.9
	9	3.3	19	0.0
	10	0.0	20	5.1

Symbol	Pin No.	V(DC)	Pin No.	V(DC)
U302	1	1.52	13	0.00
	2	5.72	14	2.60
	3	4.97	15	0.00
	4	4.63	16	2.42
	5	4.52	17	1.52
	6	0.00	18	2.17
	7	4.97	19	0.00
	8	0.01	20	0.00
	9	32.56	21	0.00
	10	0.02	--	
	11	0.01	--	
	12	0.00	--	

Symbol	Pin No.	V(DC)	Pin No.	V(DC)
I301	1	4.8	9	8.7
	2	4.8	10	0.0
	3	0.1	11	8.7
	4	0.1	12	4.8
	5	0.1	13	4.8
	6	0.2	14	4.8
	7	0.0	15	0.0
	8	0.0	16	8.8

Q001	B	0.5
	C	1.6
	E	0.0
Q002	B	0.6
	C	1.6
	E	0.3
Q003	B	5.1
	C	9.0
	E	4.5
Q004	B	5.2
	C	0.0
	E	4.5
Q005	B	0.0
	C	8.9
	E	0.0
Q008	B	0.1
	C	2.9
	E	0.0
Q009	B	5.8
	C	0.5
	E	5.8
Q010	B	5.1
	C	0.0
	E	5.8
Q011	B	0.0
	C	9.0
	E	0.0
Q012	B	3.6
	C	0.0
	E	4.2
Q013	B	3.5
	C	0.0
	E	4.1
Q014	B	0.2
	C	0.0
	E	0.0
Q015	B	4.9
	C	8.9
	E	4.3
Q016	B	4.3
	C	0.0
	E	5.0
Q018	B	3.3
	C	0.0
	E	3.3

Q019	B	3.3
	C	0.0
	E	3.3
Q020	B	3.3
	C	0.0
	E	3.3
Q023	B	0.7
	C	0.1
	E	0.0
Q026	B	0.1
	C	3.4
	E	0.0
Q027	B	0.8
	C	0.0
	E	0.0
Q028	B	0.0
	C	3.4
	E	0.0
Q031	B	0.0
	C	1.1
	E	0.0
Q032	B	0.0
	C	0.0
	E	0.0
Q033	B	0.0
	C	8.7
	E	0.0
Q035	B	2.9
	C	0.0
	E	0.0
Q036	B	3.5
	C	5.1
	E	2.8
Q037	B	0.7
	C	0.0
	E	0.0
Q038	B	0.7
	C	0.0
	E	0.0

Q039	B	0.7
	C	0.1
	E	0.0
Q040	B	0.7
	C	0.1
	E	0.0
Q041	B	4.6
	C	0.0
	E	5.0
Q042	B	5.0
	C	5.1
	E	4.3
Q044	B	0.0
	C	4.4
	E	0.0
Q050	B	2.8
	C	8.8
	E	2.1

VI. DC VOLTAGES

Signal 2

Symbol	Pin No.	V(DC)	Pin No.	V(DC)
I402	1	2.5	5	0.0
	2	5.5	6	0.0
	3	5.1	7	0.0
	4	1.3	8	0.0

Symbol	Pin No.	V(DC)
I403	1	0.0
	2	5.5
	3	3.3
	4	3.3
	5	5.5

Symbol	Pin No.	V(DC)
I404	1	3.3
	2	0.0
	3	1.3
	4	2.6
	5	3.3

Symbol	Pin No.	V(DC)
I405	1	0.0
	2	10.0
	3	9.0
	4	9.0
	5	10.0

Symbol	Pin No.	V(DC)	Pin No.	V(DC)
I453	1	2.6	5	0.0
	2	5.5	6	0.0
	3	5.2	7	0.0
	4	1.3	8	0.0

Symbol	Pin No.	V(DC)	Pin No.	V(DC)	Pin No.	V(DC)
PST1	1	0.00	23	0.00	45	2.17
	2	0.00	24	0.00	46	0.00
	3	0.00	25	0.00	46	4.77
	4	0.00	26	0.00	47	4.75
	5	0.00	27	0.00	48	0.00
	6	0.00	28	0.00	49	0.00
	7	0.00	29	0.00	50	2.12
	8	0.00	30	0.00		
	9	0.00	31	0.00		
	10	0.00	32	0.00		
	11	0.00	33	0.00		
	12	0.00	34	0.00		
	13	0.00	35	0.00		
	14	0.00	36	0.00		
	15	0.00	37	4.28		
	16	0.00	38	0.08		
	17	0.00	39	3.40		
	18	0.00	40	2.99		
	19	0.00	41	3.50		
	20	0.00	42	0.00		
	21	0.00	43	0.00		
	22	0.00	44	0.00		

Q449	B	5.5
	C	2.5
	E	5.5
Q450	B	5.4
	C	2.6
	E	5.5

VI. DC VOLTAGES

Signal 3

Symbol	Pin No.	V(DC)
I504	1	0.0
	2	10.0
	3	9.0
	4	9.0
	5	10.0

Symbol	Pin No.	V(DC)	Pin No.	V(DC)
IA02	1	3.9	5	3.9
	2	3.9	6	3.9
	3	3.9	7	0.0
	4	0.0	8	9.0

Symbol	Pin No.	V(DC)	Pin No.	V(DC)
IC01	1	4.6	9	0.0
	2	4.6	10	0.0
	3	0.0	11	0.0
	4	0.0	12	0.1
	5	0.0	13	0.2
	6	0.0	14	0.1
	7	0.0	15	4.6
	8	0.0	16	9.0

Symbol	Pin No.	V(DC)	Pin No.	V(DC)
IE01	1	6.1	9	0.0
	2	6.3	10	0.0
	3	6.0	11	0.0
	4	0.1	12	8.9
	5	0.0	13	4.6
	6	6.0	14	4.9
	7	6.0	15	4.7
	8	6.0	16	3.0

Symbol	Pin No.	V(DC)	Pin No.	V(DC)
IA01	1	4.5	16	9.0
	2	4.6	17	0.0
	3	4.5	18	4.9
	4	4.6	19	2.7
	5	4.5	20	2.7
	6	4.6	21	4.6
	7	4.5	22	4.5
	8	4.5	23	4.6
	9	1.0	24	4.5
	10	4.5	25	4.6
	11	2.8	26	4.5
	12	2.8	27	4.6
	13	4.6	28	4.5
	14	1.7	29	4.5
	15	0.0	30	0.0

Symbol	Pin No.	V(DC)	Pin No.	V(DC)
IA51	1	4.1	9	0.0
	2	4.4	10	0.0
	3	0.2	11	0.0
	4	0.1	12	1.6
	5	0.1	13	4.4
	6	0.0	14	4.4
	7	0.0	15	4.4
	8	0.0	16	9.0

Symbol	Pin No.	V(DC)	Pin No.	V(DC)
IC02	1	6.0	9	0.0
	2	6.2	10	0.0
	3	6.0	11	0.0
	4	0.2	12	8.8
	5	0.0	13	4.6
	6	6.0	14	4.8
	7	6.0	15	4.6
	8	6.0	16	2.9

Symbol	Pin No.	V(DC)	Pin No.	V(DC)
IE02	1	5.3	9	4.1
	2	0.0	10	0.0
	3	4.7	11	5.3
	4	0.0	12	3.2
	5	4.7	13	8.9
	6	3.9	14	5.3
	7	0.0	15	0.0
	8	4.4	16	5.3

VI. DC VOLTAGES

Signal 3

Q524	B	8.1
	C	-0.2
	E	8.1
Q527	B	0.0
	C	10.0
	E	0.1
Q528	B	9.9
	C	0.0
	E	9.9
Q529	B	0.0
	C	9.9
	E	0.0
Q561	B	0.8
	C	0.1
	E	0.0
Q562	B	0.0
	C	3.3
	E	0.0
Q563	B	0.0
	C	0.0
	E	0.0
Q564	B	0.9
	C	9.2
	E	0.6
QA01	B	0.0
	C	0.0
	E	0.0
QA02	B	0.1
	C	0.0
	E	0.0
QA03	B	0.1
	C	0.0
	E	0.0
QA04	B	0.1
	C	0.0
	E	0.0
Q5A05	B	4.5
	C	9.0
	E	3.9
QA06	B	4.5
	C	9.0
	E	3.9
QA51	B	0.0
	C	0.0
	E	0.0
QA55	B	8.3
	C	4.9
	E	9.0

QA56	B	0.0
	C	8.3
	E	0.0
QA57	B	4.7
	C	8.9
	E	4.0
QA58	B	0.8
	C	0.0
	E	0.0
QE01	B	0.1
	C	0.0
	E	5.2
QE02	B	2.8
	C	8.9
	E	0.0
QE03	B	0.0
	C	0.0
	E	2.8
QE04	B	4.2
	C	0.0
	E	4.8
QE05	B	0.0
	C	0.0
	E	0.0
QE06	B	4.2
	C	0.0
	E	0.0
QE07	B	3.2
	C	8.9
	E	2.6
QE08	B	0.1
	C	0.0
	E	0.8
QE09	B	0.1
	C	0.0
	E	0.8
QE10	B	0.1
	C	0.0
	E	0.8

QE20	B	4.7
	C	0.0
	E	5.3
QE21	B	4.7
	C	0.0
	E	5.3
QE22	B	0.0
	C	0.0
	E	4.6
QE24	B	4.5
	C	0.0
	E	5.2
QE25	B	2.9
	C	0.0
	E	3.5
QE26	B	4.2
	C	0.0
	E	0.0
QE27	B	2.3
	C	8.8
	E	1.6
QE28	B	4.2
	C	0.0
	E	4.9
QE29	B	0.0
	C	8.8
	E	2.6
QE30	B	3.4
	C	8.2
	E	2.8
QE31	B	8.2
	C	0.0
	E	8.8
QE32	B	5.4
	C	0.0
	E	6.1
QE33	B	3.4
	C	8.2
	E	2.8
QE34	B	8.2
	C	4.9
	E	8.8
QE35	B	4.9
	C	0.0
	E	5.5

QE36	B	3.5
	C	8.2
	E	2.8
QE37	B	8.2
	C	3.8
	E	8.8
QE38	B	
	C	
	E	
QE39	B	0.6
	C	0.1
	E	0.0
QE40	B	0.0
	C	0.1
	E	0.0

VI. DC VOLTAGES

Terminal 1

Symbol	Pin No.	V(DC)	Pin No.	V(DC)
IV01	1	3.9	33	4.8
	2	4.4	34	4.7
	3	3.9	35	0.0
	4	4.4	36	4.4
	5	4.4	37	4.4
	6	0.2	38	4.4
	7	0.1	39	3.6
	8	3.9	40	4.4
	9	4.4	41	4.4
	10	3.9	42	8.8
	11	4.4	43	4.4
	12	4.4	44	4.4
	13	0.2	45	4.4
	14	4.8	46	3.6
	15	4.3	47	4.4
	16	4.4	48	0.1
	17	3.9	49	4.8
	18	4.4	50	4.4
	19	4.4	51	4.4
	20	0.1	52	4.4
	21	4.8	53	4.4
	22	3.9	54	4.4
	23	4.4	55	3.6
	24	3.9	56	4.1
	25	4.4	57	0.0
	26	4.4	58	4.3
	27	0.1	59	4.4
	28	4.0	60	5.3
	29	4.4	61	4.4
	30	3.9	62	4.4
	31	4.4	63	4.9
	32	0.1	64	4.4

Symbol	Pin No.	V(DC)	Pin No.	V(DC)
IV03	1	1.1	33	0.0
	2	0.9	34	5.1
	3	1.2	35	0.0
	4	8.8	36	5.1
	5	5.2	37	0.0
	6	0.0	38	5.2
	7	4.8	39	8.7
	8	0.0	40	4.2
	9	4.8	41	0.0
	10	4.9	42	4.2
	11	1.2	43	0.0
	12	0.9	44	4.3
	13	1.1	45	8.7
	14	8.8	46	4.2
	15	5.2	47	0.0
	16	0.0	48	4.2
	17	4.8	49	0.0
	18	0.0	50	4.2
	19	4.8	51	8.8
	20	5.0	52	8.8
	21	1.1	53	5.2
	22	0.8	54	0.0
	23	1.1	55	4.8
	24	0.0	56	0.0
	25	0.0	57	4.8
	26	4.7	58	8.8
	27	4.8	59	5.2
	28	5.0	60	0.0
	29	0.0	61	4.8
	30	4.3	62	0.0
	31	2.8	63	4.8
	32	4.9	64	5.0

Symbol	Pin No.	V(DC)	Pin No.	V(DC)
IV02	1	0.0	9	0.0
	2	2.3	10	2.3
	3	2.8	11	2.2
	4	2.5	12	3.4
	5	1.3	13	3.8
	6	0.0	14	1.5
	7	0.0	15	3.6
	8	5.0	16	5.0

Symbol	Pin No.	V(DC)	Pin No.	V(DC)
IV04	1	3.0	9	1.8
	2	0.0	10	0.0
	3	2.3	11	3.0
	4	0.0	12	2.7
	5	2.3	13	5.0
	6	1.1	14	3.0
	7	0.0	15	0.0
	8	1.9	16	3.0

Symbol	Pin No.	V(DC)	Pin No.	V(DC)
IV06	1	0.0	9	0.0
	2	0.1	10	0.0
	3	0.0	11	5.0
	4	0.1	12	0.1
	5	0.1	13	0.1
	6	0.0	14	0.1
	7	0.0	15	0.1
	8	0.0	16	5.0

Symbol	Pin No.	V(DC)	Pin No.	V(DC)
IV07	1	0.0	9	0.0
	2	0.0	10	0.0
	3	0.0	11	5.0
	4	0.0	12	0.1
	5	0.0	13	0.2
	6	0.0	14	0.2
	7	0.0	15	0.0
	8	0.0	16	5.0

Symbol	Pin No.	V(DC)	Pin No.	V(DC)
IV11	1	2.5	9	0.0
	2	2.5	10	2.5
	3	4.7	11	0.0
	4	0.4	12	0.0
	5	0.4	13	0.0
	6	4.7	14	4.7
	7	4.7	15	4.8
	8	0.0	16	5.0

VI. DC VOLTAGES

Terminal 1

QV05	B	2.6
	C	0.0
	E	3.2
QV06	B	1.4
	C	1.9
	E	0.0
QV07	B	0.0
	C	3.1
	E	0.0
QV08	B	0.0
	C	0.0
	E	0.0
QV09	B	0.0
	C	0.0
	E	0.0
QV10	B	4.3
	C	8.8
	E	3.7
QV11	B	3.6
	C	8.8
	E	3.0
QV12	B	4.4
	C	8.8
	E	3.7
QV14	B	4.3
	C	8.9
	E	3.6

QV15	B	1.8
	C	0.0
	E	2.4
QV16	B	4.4
	C	8.9
	E	3.8
QV17	B	1.9
	C	0.0
	E	2.6
QV18	B	4.1
	C	8.9
	E	3.5
QV19	B	4.1
	C	8.9
	E	3.5
QV20	B	1.7
	C	0.0
	E	2.3
QV21	B	4.3
	C	8.9
	E	3.6
QV22	B	1.9
	C	0.0
	E	2.5
QV23	B	6.6
	C	8.9
	E	5.9
QV24	B	2.3
	C	0.0
	E	3.0
QV25	B	3.7
	C	8.9
	E	3.0
QV26	B	4.3
	C	8.3
	E	3.7

QV29	B	3.8
	C	8.9
	E	3.2
QV30	B	2.8
	C	8.3
	E	2.2
QV31	B	8.3
	C	2.5
	E	8.9
QV32	B	2.5
	C	8.9
	E	1.8
QV33	B	2.3
	C	0.0
	E	2.9
QV34	B	2.2
	C	0.0
	E	2.9
QV35	B	2.2
	C	0.0
	E	2.9
QV36	B	2.3
	C	0.0
	E	2.9
QV37	B	2.2
	C	0.0
	E	2.9
QV38	B	2.2
	C	0.0
	E	2.9
QV39	B	0.8
	C	0.0
	E	0.0
QV41	B	0.4
	C	5.0
	E	0.0
QXA0	B	0.1
	C	5.0
	E	0.0
QXA1	B	0.0
	C	5.0
	E	0.0

VI. DC VOLTAGES

Terminal 2

Symbol	Pin No.	V(DC)	Pin No.	V(DC)	Pin No.	V(DC)	Pin No.	V(DC)	Pin No.	V(DC)
IY01	1	0.0	21	0.0	41	0.0	61	0.1	81	0.0
	2	0.0	22	0.0	42	0.0	62	2.5	82	0.0
	3	0.0	23	0.0	43	0.0	63	2.4	83	0.0
	4	0.0	24	0.0	44	0.0	64	0.0	84	0.0
	5	0.0	25	0.0	45	0.0	65	0.0	85	1.1
	6	3.3	26	2.4	46	0.0	66	0.0	86	2.4
	7	3.3	27	2.5	47	3.3	67	0.0	87	1.5
	8	0.0	28	0.0	48	0.0	68	0.0	88	1.4
	9	0.0	29	0.0	49	0.0	69	0.0	89	1.1
	10	0.0	30	0.0	50	2.5	70	0.0	90	0.1
	11	0.0	31	3.3	51	1.5	71	0.0	91	0.0
	12	0.0	32	0.0	52	0.0	72	0.0	92	0.0
	13	0.0	33	0.0	53	0.0	73	0.0	93	1.1
	14	0.0	34	0.0	54	1.3	74	0.0	94	0.4
	15	0.0	35	0.0	55	2.4	75	0.0	95	0.0
	16	0.0	36	1.2	56	0.0	76	0.0	96	1.3
	17	0.0	37	1.2	57	0.0	77	3.0	97	0.0
	18	0.0	38	2.4	58	3.3	78	0.0	98	0.0
	19	0.0	39	2.5	59	0.2	79	0.0	99	0.0
	20	0.0	40	0.0	60	0.2	80	0.0	100	2.5

Symbol	Pin No.	V(DC)
IY02	1	0.0
	2	3.3
	3	0.0
	4	0.0
	5	0.0

Symbol	Pin No.	V(DC)	Pin No.	V(DC)
IY03	1	8.8	16	2.5
	2	2.5	17	4.5
	3	0.0	18	0.0
	4	2.5	19	2.5
	5	0.0	20	2.1
	6	2.0	21	4.0
	7	0.1	22	3.6
	8	4.7	23	3.5
	9	6.1	24	0.0
	10	5.0	25	4.9
	11	0.0	26	3.0
	12	8.8	27	0.0
	13	4.7	28	2.3
	14	4.8	29	2.3
	15	0.2	30	2.0

Symbol	Pin No.	V(DC)	Pin No.	V(DC)
IY04	1	8.8	16	2.5
	2	2.5	17	4.5
	3	0.0	18	0.0
	4	2.5	19	2.5
	5	0.0	20	2.1
	6	2.0	21	4.0
	7	0.1	22	3.5
	8	4.7	23	3.5
	9	6.1	24	3.8
	10	5.0	25	4.9
	11	0.0	26	3.0
	12	0.0	27	0.0
	13	4.7	28	2.3
	14	4.8	29	2.3
	15	0.2	30	2.0

VI. DC VOLTAGES

Terminal 2

QY01	B	4.7
	C	8.9
	E	4.0
QY03	B	3.1
	C	8.9
	E	3.0
QY04	B	3.0
	C	0.0
	E	3.6
QY05	B	3.0
	C	0.0
	E	3.6
QY06	B	2.5
	C	8.8
	E	2.2
QY09	B	1.4
	C	0.0
	E	2.1
QY10	B	3.6
	C	8.3
	E	3.0
QY11	B	8.3
	C	3.6
	E	8.9
QY12	B	3.6
	C	8.9
	E	3.0
QY13	B	0.0
	C	0.0
	E	2.1
QY14	B	1.8
	C	8.3
	E	0.0
QY15	B	8.3
	C	3.3
	E	8.9
QY16	B	3.3
	C	8.9
	E	2.6
QY17	B	4.0
	C	8.9
	E	3.8
QY18	B	5.9
	C	8.9
	E	5.3

QY19	B	0.0
	C	5.9
	E	0.0
QY20	B	1.6
	C	0.0
	E	2.2
QY21	B	3.0
	C	0.0
	E	3.6
QY22	B	3.9
	C	0.0
	E	4.5
QY23	B	3.6
	C	0.0
	E	4.2
QY24	B	3.6
	C	0.0
	E	4.2
QY26	B	0.2
	C	4.9
	E	0.2
QY31	B	4.5
	C	4.9
	E	3.8
QY32	B	0.2
	C	0.0
	E	0.2

VI. DC VOLTAGES

Power Supply

Symbol	Pin No.	V(DC)
I901	1	2.1
	2	0.1
	3	296.9
	4	19.0
	5	0.0

Symbol	Pin No.	V(DC)
I903	1	14.1
	2	13.1
	3	0.0
	4	19.0

Symbol	Pin No.	V(DC)
I906	1	0.0
	2	3.3
	3	9.9
	4	9.0
	5	16.6

Symbol	Pin No.	V(DC)	Pin No.	V(DC)
I910	1	0.0	5	10.2
	2	5.7	6	7.8
	3	3.6	7	1.1
	4	1.9	8	1.1

Symbol	Pin No.	V(DC)	Pin No.	V(DC)
I912	1	5.8	5	0.0
	2	0.0	6	5.1
	3	28.2	7	1.8
	4	----	8	0.0

Symbol	Pin No.	V(DC)
I902	1	99.2
	2	102.4
	3	1.8
	4	5.2

Symbol	Pin No.	V(DC)
I907	1	0.0
	2	2.0
	3	11.8
	4	9.1
	5	16.6

Symbol	Pin No.	V(DC)
I911	1	0.0
	2	3.3
	3	16.4
	4	0.4
	5	16.5

Q902	B	9.7
	C	19.0
	E	4.3
Q904	B	6.4
	C	13.1
	E	5.8
Q905	B	2.3
	C	0.1
	E	2.3
Q906	B	2.3
	C	0.1
	E	2.3
Q907	B	5.2
	C	0.6
	E	5.7

VI. DC VOLTAGES

Control

Symbol	Pin No.	V(DC)
HM01	1	1.60
	2	4.98
	3	0.01

Symbol	Pin No.	V(DC)
PFI	1	0.01
	2	4.96
	3	-0.30
	4	3.25

Symbol	Pin No.	V(DC)
PFS	1	2.47
	2	0.01
	3	3.27
	4	3.30
	5	0.00
	6	0.06
	7	4.97
	8	0.00
	9	0.06
	10	0.02
	11	0.02
	12	3.27
	13	0.00

Symbol	Pin No.	V(DC)
PFT	1	8.86
	2	-0.27
	3	-0.01
	4	2.25
	5	2.26
	6	0.00
	7	-0.25
	8	-0.03
	9	-0.25
	10	-0.03
	11	4.77

QM03	B	2.91
	C	8.86
	E	2.26
QM04	B	2.99
	C	8.86
	E	2.35
QM06	B	0.68
	C	0.08
	E	0.01
QM07	B	0.08
	C	4.98
	E	0.01
QM09	B	0.02
	C	7.36
	E	0.00

VI. DC VOLTAGES

Audio

Symbol	Pin No.	V(DC)	Pin No.	V(DC)
IAA1	1	1.55	7	14.28
	2	0.01	8	5.04
	3	0.01	9	31.56
	4	0.01	10	0.00
	5	1.54	11	4.18
	6	10.64	12	14.18

Symbol	Pin No.	V(DC)	Pin No.	V(DC)
IAA2	1	1.55	7	14.86
	2	0.01	8	5.04
	3	0.01	9	31.55
	4	0.01	10	0.00
	5	1.54	11	4.24
	6	10.71	12	14.32

QAA1	B	0.00
	C	10.64
	E	0.01
QAA2	B	0.01
	C	4.23
	E	0.01

QAM1	B	0.00
	C	10.71
	E	0.00
QAM2	B	0.01
	C	4.15
	E	0.01

VII. WAVEFORMS AT EACH SECTION

Numbers inside circle correspond to locations shown in the circuit diagram.

1 U302 P18

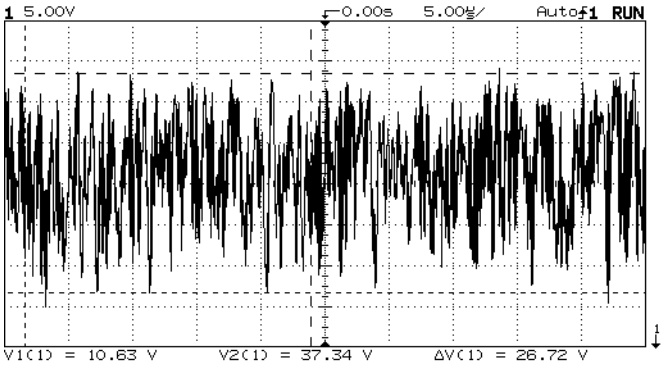

2 U302 P05

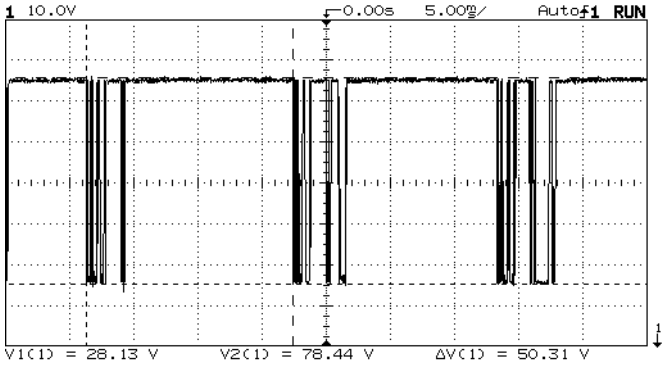

3 U302 P04

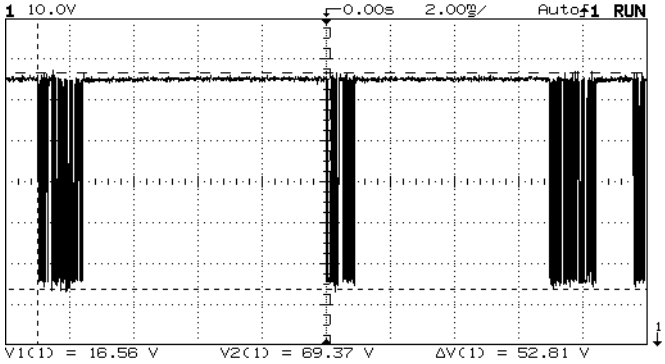

4 U301 P19

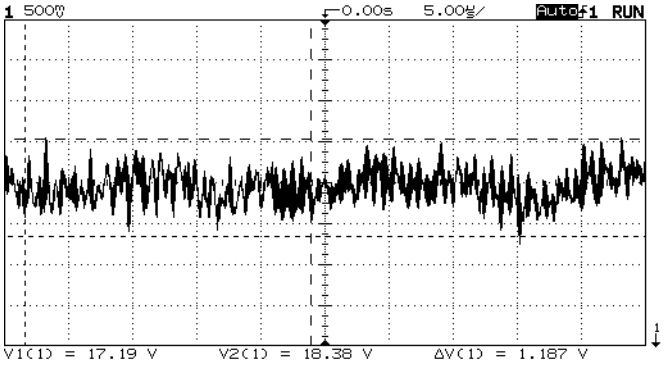

5 U301 P18

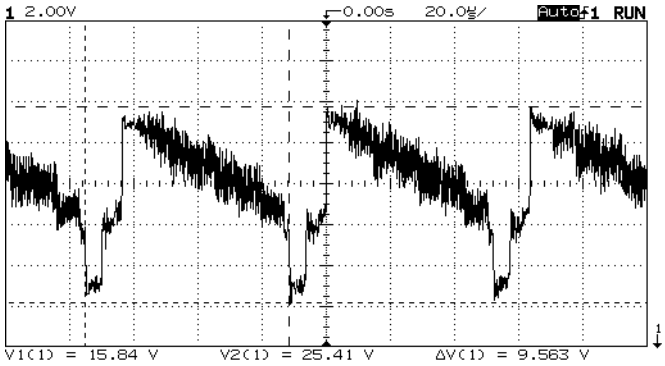

6 U301 P05

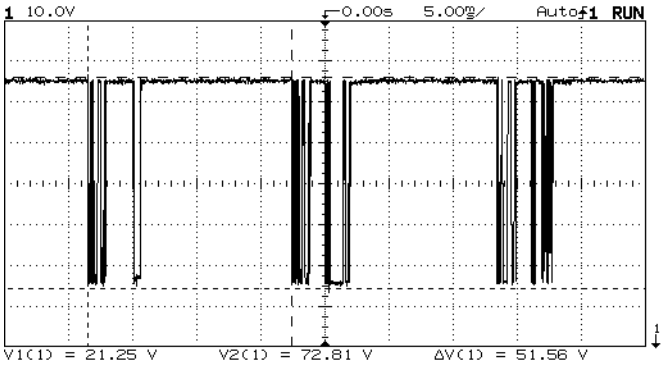

BACK TO ADJUSTMENTS

VII. WAVEFORMS AT EACH SECTION

Numbers inside circle correspond to locations shown in the circuit diagram.

7 U301 P04

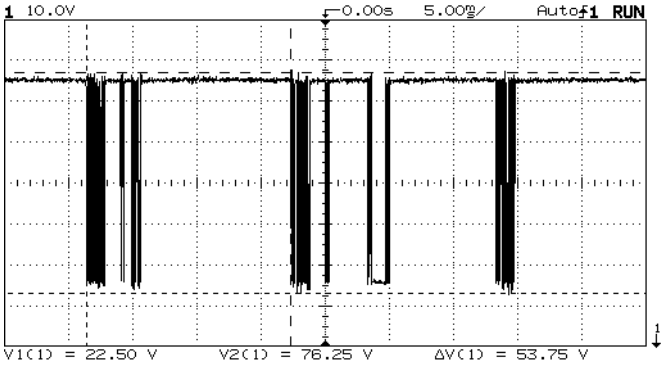

8 I001 P23

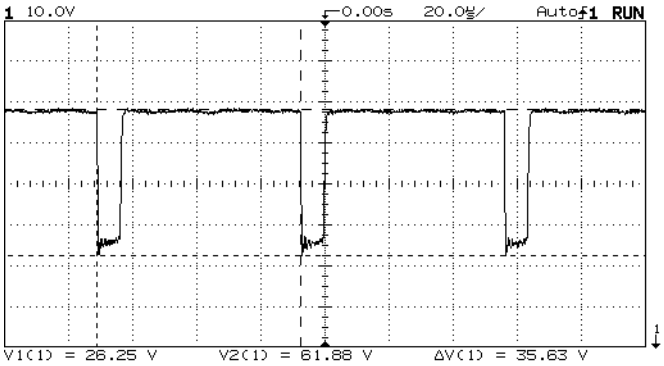

9 I001 P28

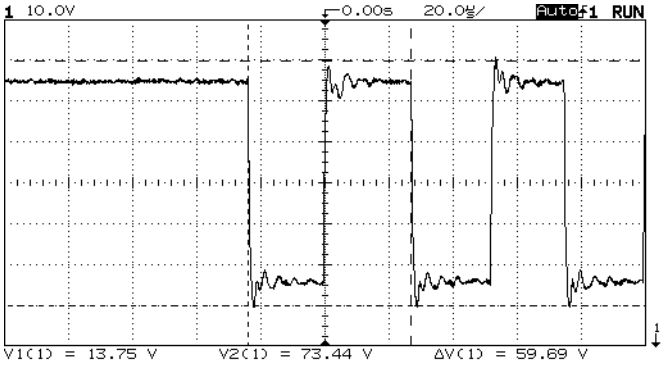

10 I001 P29

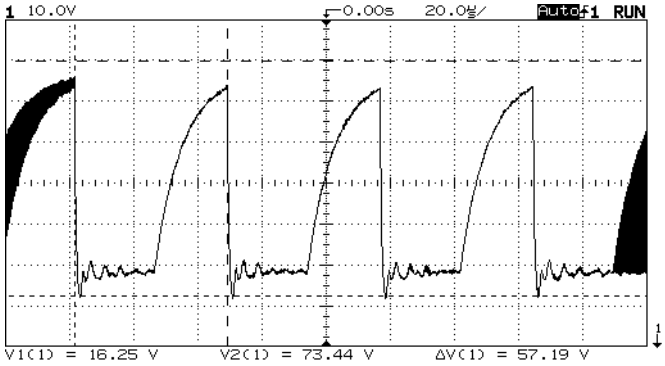

11 I001 P30

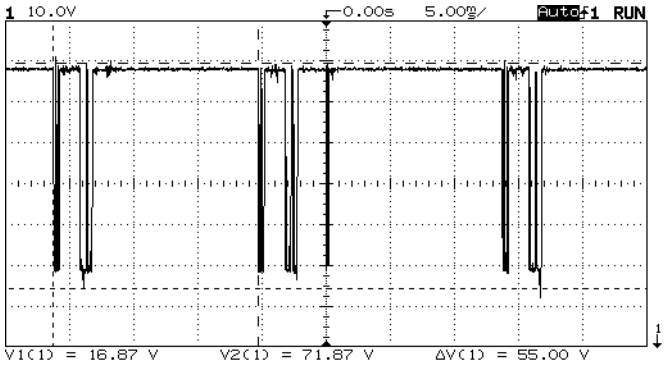

12 PST1 P50

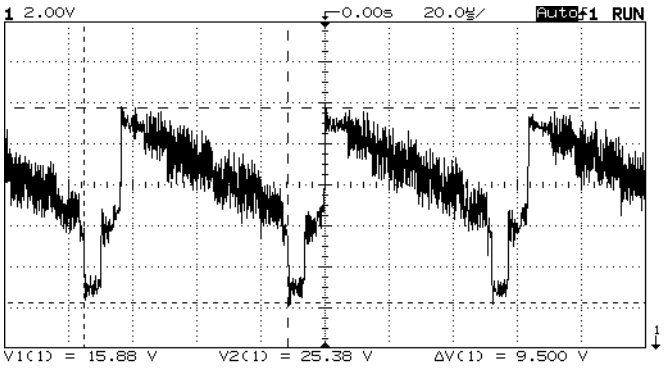

VII. WAVEFORMS AT EACH SECTION

Numbers inside circle correspond to locations shown in the circuit diagram.

(13) PST1 P45

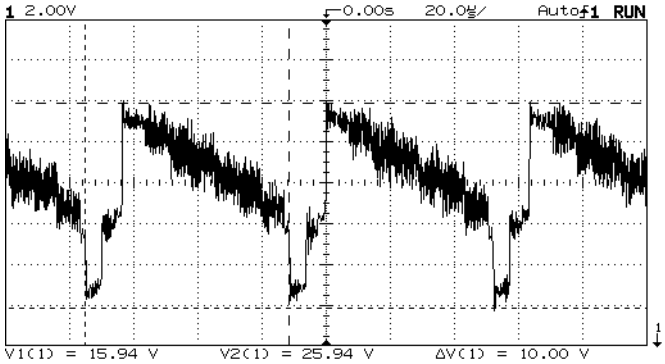

(14) PST1 P41

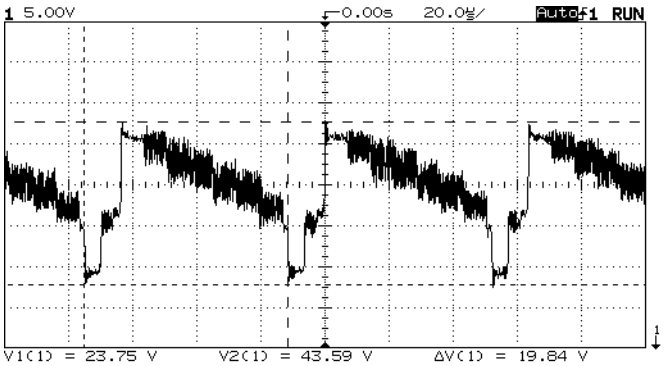

(15) PST1 P39

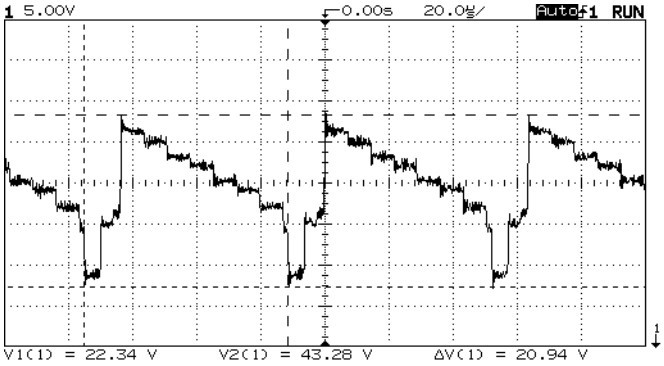

(16) PST1 P19

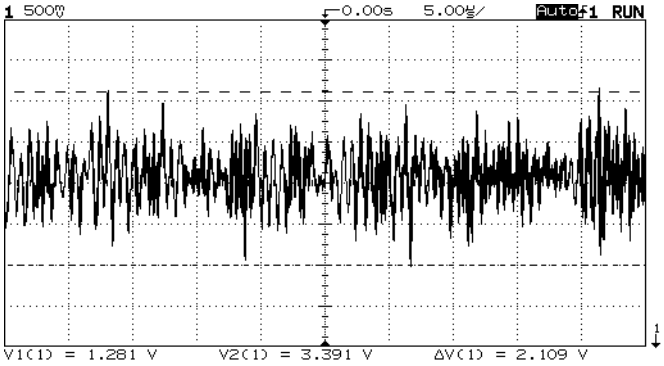

(17) PST1 P18

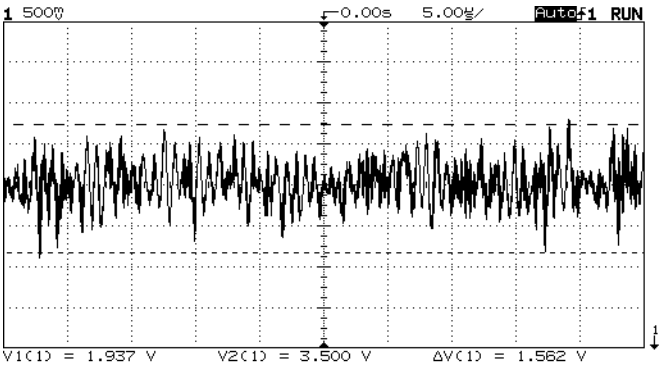

(18) PST2 P13

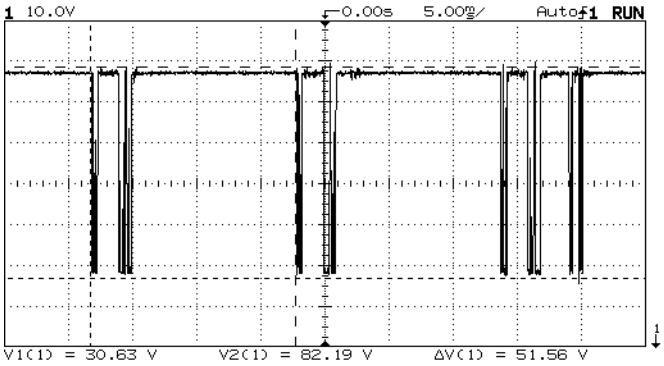

VII. WAVEFORMS AT EACH SECTION

Numbers inside circle correspond to locations shown in the circuit diagram.

(19) PST2 P12

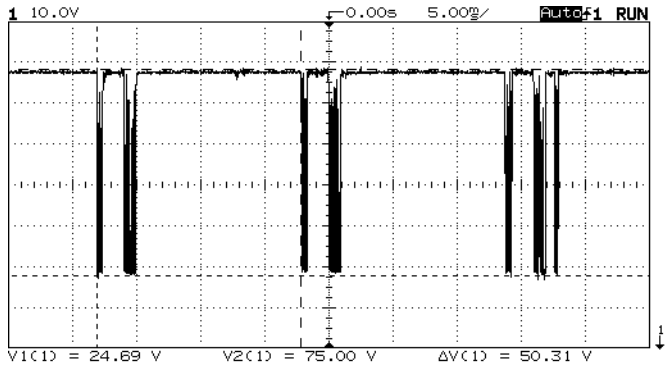

(20) IE01 P02

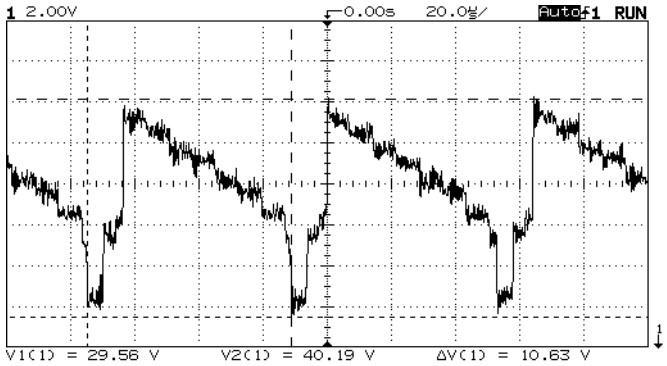

(21) IV11 P15

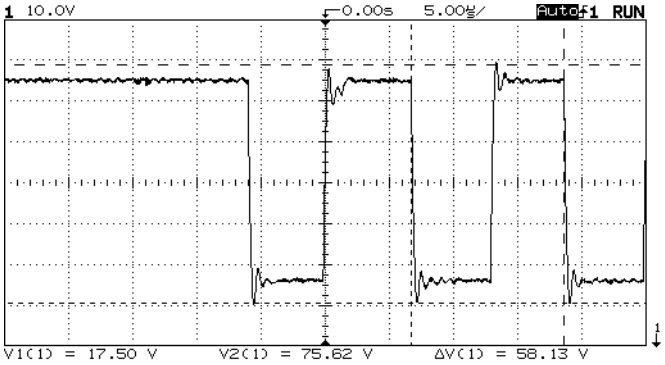

(22) IV11 P14

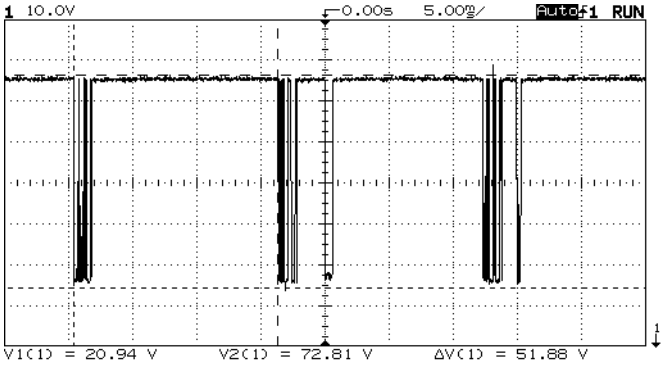

(23) IY04 P02

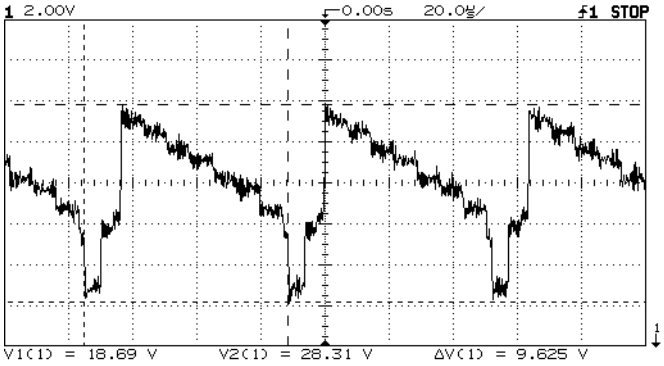

(24) IY04 P03

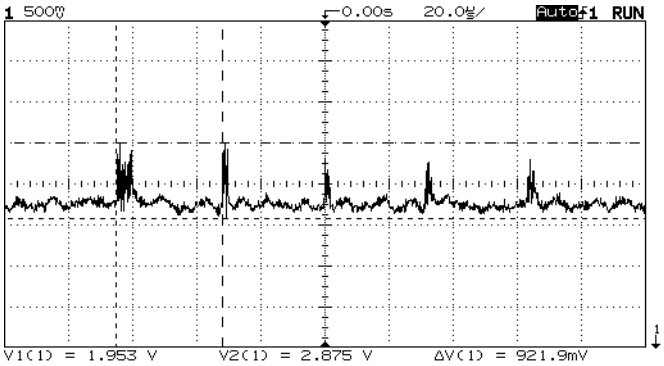

VII. WAVEFORMS AT EACH SECTION

Numbers inside circle correspond to locations shown in the circuit diagram.

(25) IY04 P05

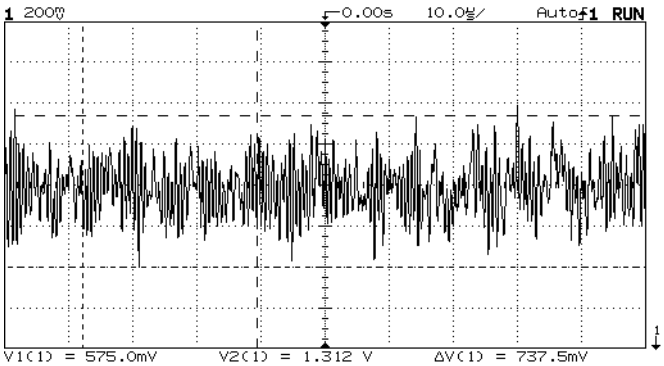

(26) IY04 P13

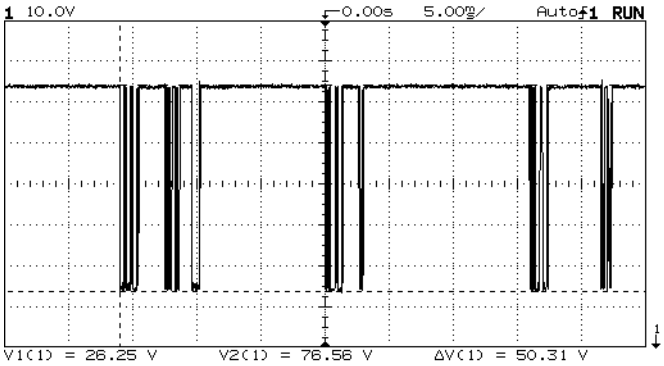

(27) IY04 P14

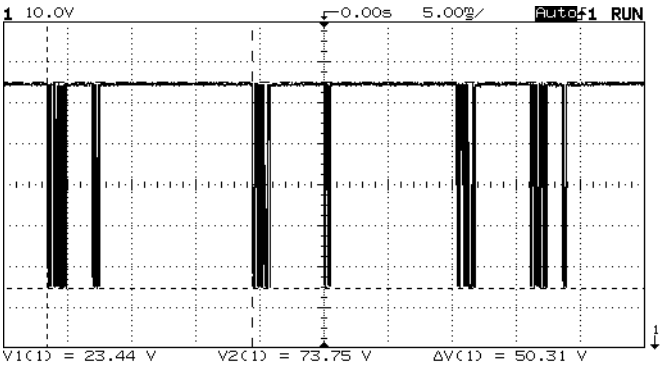

(28) IY04 P15

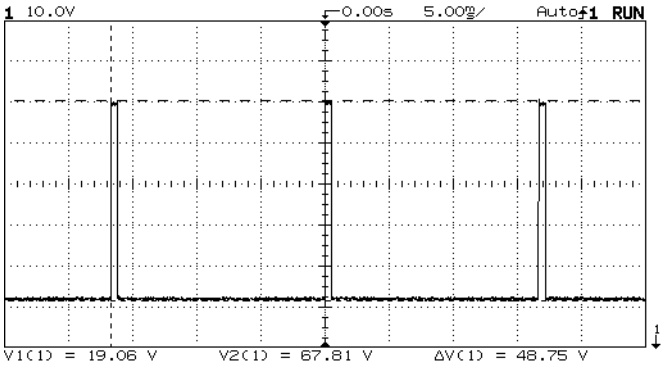

(29) IY04 P15

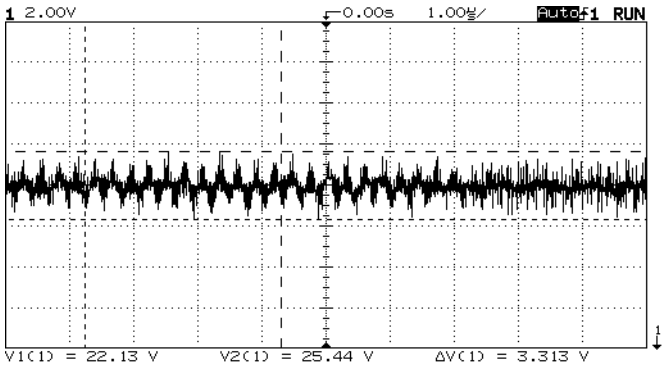

(30) IY04 P24

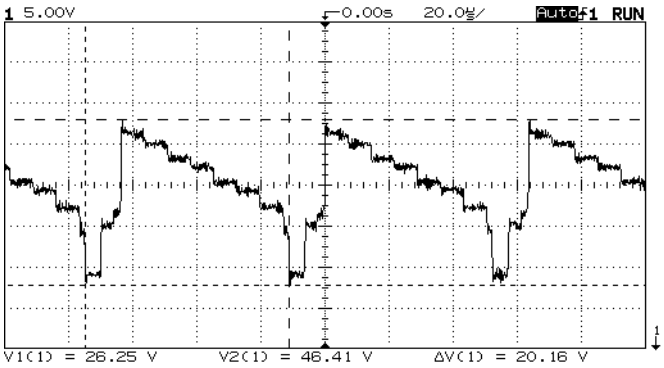

VII. WAVEFORMS AT EACH SECTION

Numbers inside circle correspond to locations shown in the circuit diagram.

(31) IY03 P13

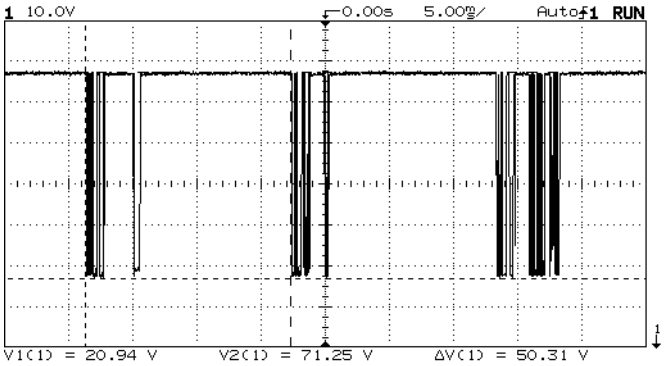

(32) IY03 P14

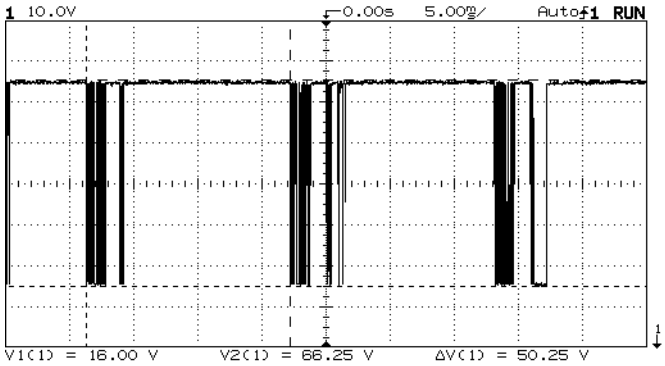

(33) IY03 P02

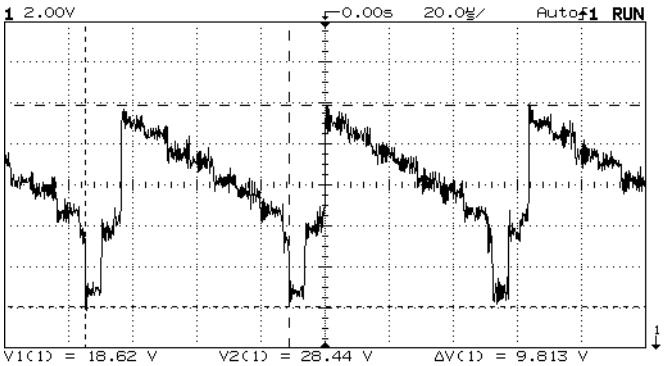

(34) IY03 P24

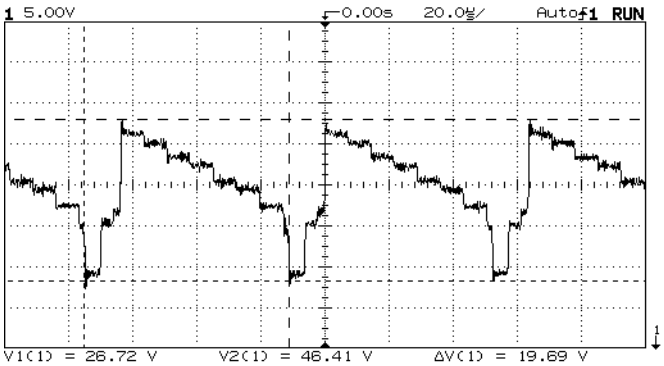

VIII. REPLACEMENT PARTS LIST

PRODUCT SERVICE NOTE: Components marked with a ⚠ have special characteristics important to safety. Before replacing any of these components, read carefully, the PRODUCT SAFETY NOTICE of this Service Manual. Don't degrade the safety of the receiver through improper servicing.

ABBREVIATIONS

Capacitors:
- AL: Aluminum Electrolytic
- CD: Ceramic Disc
- EL: Electrolitic
- PF: Polyester Film
- PP: Polypropylene
- PL: Plastic
- TA: Tantalum
- PR: Paper
- TM: Trimmer
- MC: Mylar

Resistors:
- CF: Carbon Film
- CC: Carbon Composition
- MF: Metal Oxide
- VR: Variable Resistor
- WW: Wire Wound
- FR: Fuse Resistor
- MG: Metal Grazed

Semiconductors:
- TR: Transistor
- DI: Diode
- ZD: Zener Diode
- VA: Varistor
- TH: Termistor
- IC: Integrated Circuit

SYMBOL NO.	PART NO.	PART DESCRIPTION	50"	60"	SYMBOL NO.	PART NO.	PART DESCRIPTION	50"	60"
					C059	0800326R	CAP.-ELECTRO. 100UF-M 16V	0	0
		CAPACITORS			C060	0893232R	CAP 1608CHIP 100000PFZF25V TAPE	0	0
C001	0893208R	CAP 1608CHIP 1000PFKB 50V TAPE	0	0	C061	0800326R	CAP.-ELECTRO. 100UF-M 16V	0	0
C002	0800282R	CAP.-ELECTORO. 2.2UF-M(SMG) 50V	0	0	C064	0800294R	CAP.-ELECTRO. 10UF-M(SMG) 50V	0	0
C003	0893131R	CAP 1608CHIP 220PFJCH 50V TAPE	0	0	C067	0800326R	CAP.-ELECTRO. 100UF-M 16V	0	0
C004	0800294R	CAP.-ELECTRO. 10UF-M(SMG) 50V	0	0	C068	0893232R	CAP 1608CHIP 100000PFZF25V TAPE	0	0
C005	0893179R	CAP.CHIP-CERAMIC 100000PF 16V TAPE	0	0	C069	0800326R	CAP.-ELECTRO. 100UF-M 16V	0	0
C006	0893193R	CAP 1608CHIP 10000PFKB 25V TAPE	0	0	C070	0893232R	CAP 1608CHIP 100000PFZF25V TAPE	0	0
C007	0800294R	CAP.-ELECTRO. 10UF-M(SMG) 50V	0	0	C071	0800279R	CAP.-ELECTORO. 1.0UF-M(SMG) 50V	0	0
C010	0893179R	CAP.CHIP-CERAMIC 100000PF 16V TAPE	0	0	C072	0800326R	CAP.-ELECTRO. 100UF-M 16V	0	0
C011	0893104R	CAP 1608CHIP 2PFCCK 50V TAPE	0	0	C073	0893232R	CAP 1608CHIP 100000PFZF25V TAPE	0	0
C012	0893182R	CERAMIC CAPACITOR(15000PF 16V)	0	0	C074	0893232R	CAP 1608CHIP 100000PFZF25V TAPE	0	0
C013	0893232R	CAP 1608CHIP 100000PFZF25V TAPE	0	0	C075	0800294R	CAP.-ELECTRO. 10UF-M(SMG) 50V	0	0
C014	0800326R	CAP.-ELECTRO. 100UF-M 16V	0	0	C076	0893222R	CAP 1608CHIP10000PFKB 50V TAPE	0	0
C015	0893239R	CAP 1608CHIP 10000PFZF 50V TAPE	0	0	C077	0893208R	CAP 1608CHIP 1000PFKB 50V TAPE	0	0
C016	0893208R	CAP 1608CHIP 1000PFKB 50V TAPE	0	0	C079	0893208R	CAP 1608CHIP 1000PFKB 50V TAPE	0	0
C017	0800282R	CAP.-ELECTORO. 2.2UF-M(SMG) 50V	0	0	C080	0800326R	CAP.-ELECTRO. 100UF-M 16V	0	0
C018	0893131R	CAP 1608CHIP 220PFJCH 50V TAPE	0	0	C081	0893232R	CAP 1608CHIP 100000PFZF25V TAPE	0	0
C019	0893204R	CAP 1608CHIP 470PFKB 50V TAPE	0	0	C082	0800326R	CAP.-ELECTRO. 100UF-M 16V	0	0
C020	0893232R	CAP 1608CHIP 100000PFZF25V TAPE	0	0	C083	0893232R	CAP 1608CHIP 100000PFZF25V TAPE	0	0
C021	0800326R	CAP.-ELECTRO. 100UF-M 16V	0	0	C086	0800294R	CAP.-ELECTRO. 10UF-M(SMG) 50V	0	0
C022	0893204R	CAP 1608CHIP 470PFKB 50V TAPE	0	0	C087	0893183R	CERAMIC CAPACITOR(18000PF 16V)	0	0
C023	0893213R	CAP1608CHIP 2200PFKB 50V TAPE	0	0	C090	0893239R	CAP 1608CHIP 10000PFZF 50V TAPE	0	0
C024	0893232R	CAP 1608CHIP 100000PFZF25V TAPE	0	0	C091	0800352R	CAP.-ELECTRO.470UF 10V	0	0
C025	0800326R	CAP.-ELECTRO. 100UF-M 16V	0	0	C092	0893239R	CAP 1608CHIP 10000PFZF 50V TAPE	0	0
C027	0800303R	CAP.-ELECTRO. 22UF-M 50V	0	0	C093	0893239R	CAP 1608CHIP 10000PFZF 50V TAPE	0	0
C028	0893208R	CAP 1608CHIP 1000PFKB 50V TAPE	0	0	C096	0893239R	CAP 1608CHIP 10000PFZF 50V TAPE	0	0
C029	0893232R	CAP 1608CHIP 100000PFZF25V TAPE	0	0	C098	0800294R	CAP.-ELECTRO. 10UF-M(SMG) 50V	0	0
C030	0800326R	CAP.-ELECTRO. 100UF-M 16V	0	0	C099	0800294R	CAP.-ELECTRO. 10UF-M(SMG) 50V	0	0
C031	AA01111R	CERAMIC CAPACITOR(1.0UF 6.3V)	0	0	C0A1	0800294R	CAP.-ELECTRO. 10UF-M(SMG) 50V	0	0
C032	AA01101R	CERAMIC CAPACITOR(1UF 10V-F)	0	0	C0A4	0893179R	CAP.CHIP-CERAMIC 100000PF 16V TAPE	0	0
C033	AA01111R	CERAMIC CAPACITOR(1.0UF 6.3V)	0	0	C0A5	0893179R	CAP.CHIP-CERAMIC 100000PF 16V TAPE	0	0
C034	AA01101R	CERAMIC CAPACITOR(1UF 10V-F)	0	0	C0A6	0893208R	CAP 1608CHIP 1000PFKB 50V TAPE	0	0
C035	AA01111R	CERAMIC CAPACITOR(1.0UF 6.3V)	0	0	C0A7	0800326R	CAP.-ELECTRO. 100UF-M 16V	0	0
C036	AA01101R	CERAMIC CAPACITOR(1UF 10V-F)	0	0	C0A8	0893232R	CAP 1608CHIP 100000PFZF25V TAPE	0	0
C037	0893232R	CAP 1608CHIP 100000PFZF25V TAPE	0	0	C102	0893239R	CAP 1608CHIP 10000PFZF 50V TAPE	0	0
C038	0800326R	CAP.-ELECTRO. 100UF-M 16V	0	0	C103	0800352R	CAP.-ELECTRO.470UF 10V	0	0
C039	0800326R	CAP.-ELECTRO. 100UF-M 16V	0	0	C104	0893239R	CAP 1608CHIP 10000PFZF 50V TAPE	0	0
C040	0893232R	CAP 1608CHIP 100000PFZF25V TAPE	0	0	C106	0893239R	CAP 1608CHIP 10000PFZF 50V TAPE	0	0
C041	AA01101R	CERAMIC CAPACITOR(1UF 10V-F)	0	0	C109	0893239R	CAP 1608CHIP 10000PFZF 50V TAPE	0	0
C042	AA01101R	CERAMIC CAPACITOR(1UF 10V-F)	0	0	C111	0800352R	CAP.-ELECTRO.470UF 10V	0	0
C050	0893205R	CAP 1608CHIP 560PFKB 50V TAPE	0	0	C112	0893239R	CAP 1608CHIP 10000PFZF 50V TAPE	0	0
C051	0800279R	CAP.-ELECTORO. 1.0UF-M(SMG) 50V	0	0	C113	0800326R	CAP.-ELECTRO. 100UF-M 16V	0	0
C052	0893205R	CAP 1608CHIP 560PFKB 50V TAPE	0	0	C114	0893232R	CAP 1608CHIP 100000PFZF25V TAPE	0	0
C053	0800279R	CAP.-ELECTORO. 1.0UF-M(SMG) 50V	0	0	C119	0893232R	CAP 1608CHIP 100000PFZF25V TAPE	0	0
C054	0800326R	CAP.-ELECTRO. 100UF-M 16V	0	0	C120	0800326R	CAP.-ELECTRO. 100UF-M 16V	0	0
C055	0893232R	CAP 1608CHIP 100000PFZF25V TAPE	0	0	C121	0893232R	CAP 1608CHIP 100000PFZF25V TAPE	0	0
C056	0893232R	CAP 1608CHIP 100000PFZF25V TAPE	0	0	C122	0893232R	CAP 1608CHIP 100000PFZF25V TAPE	0	0
C057	0800326R	CAP.-ELECTRO. 100UF-M 16V	0	0	C420	0893232R	CAP 1608CHIP 100000PFZF25V TAPE	0	0
C058	0893232R	CAP 1608CHIP 100000PFZF25V TAPE	0	0	C421	0800326R	CAP.-ELECTRO. 100UF-M 16V	0	0

PRODUCT SERVICE NOTE: Components marked with a ⚠ have special characteristics important to safety. Before replacing any of these components, read carefully, the PRODUCT SAFETY NOTICE of this Service Manual. Don't degrade the safety of the receiver through improper servicing.

SYMBOL NO.	PART NO.	PART DESCRIPTION	50"	60"	SYMBOL NO.	PART NO.	PART DESCRIPTION	50"	60"
C422	0893232R	CAP 1608CHIP 100000PFZF25V TAPE	0	0	C701	0893179R	CAP.CHIP-CERAMIC 100000PF 16V TAPE	0	
C423	0800326R	CAP.-ELECTRO. 100UF-M 16V	0	0	C702	0893179R	CAP.CHIP-CERAMIC 100000PF 16V TAPE		0
C424	0800326R	CAP.-ELECTRO. 100UF-M 16V	0	0	C702	0893179R	CAP.CHIP-CERAMIC 100000PF 16V TAPE	0	
C425	0893232R	CAP 1608CHIP 100000PFZF25V TAPE	0	0	C703	0251455R	CEM-470M160WCNT		0
C426	0800326R	CAP.-ELECTRO. 100UF-M 16V	0	0	C704	0893179R	CAP.CHIP-CERAMIC 100000PF 16V TAPE		0
C427	0893232R	CAP 1608CHIP 100000PFZF25V TAPE	0	0	C705	0893179R	CAP.CHIP-CERAMIC 100000PF 16V TAPE		0
C428	AA01101R	CERAMIC CAPACITOR(1UF 10V-F)	0	0	C706	0893179R	CAP.CHIP-CERAMIC 100000PF 16V TAPE		0
C429	0800326R	CAP.-ELECTRO. 100UF-M 16V	0	0	C707	0251455R	CEM-470M160WCNT		0
C430	AA01101R	CERAMIC CAPACITOR(1UF 10V-F)	0	0	C707	0893179R	CAP.CHIP-CERAMIC 100000PF 16V TAPE	0	
C432	AA01101R	CERAMIC CAPACITOR(1UF 10V-F)	0	0	C708	0893179R	CAP.CHIP-CERAMIC 100000PF 16V TAPE	0	
C433	AA01101R	CERAMIC CAPACITOR(1UF 10V-F)	0	0	C709	0893179R	CAP.CHIP-CERAMIC 100000PF 16V TAPE	0	
C491	0893232R	CAP 1608CHIP 100000PFZF25V TAPE	0	0	C710	0893179R	CAP.CHIP-CERAMIC 100000PF 16V TAPE	0	
C492	0800326R	CAP.-ELECTRO. 100UF-M 16V	0	0	C711	0251455R	CEM-470M160WCNT	0	
C493	0893232R	CAP 1608CHIP 100000PFZF25V TAPE	0	0	C712	AA01101R	CERAMIC CAPACITOR(1UF 10V-F)	0	
C496	0800326R	CAP.-ELECTRO. 100UF-M 16V	0	0	C713	0893179R	CAP.CHIP-CERAMIC 100000PF 16V TAPE	0	
C497	0893232R	CAP 1608CHIP 100000PFZF25V TAPE	0	0	C714	0251455R	CEM-470M160WCNT	0	
C498	AA01101R	CERAMIC CAPACITOR(1UF 10V-F)	0	0	C715	0893179R	CAP.CHIP-CERAMIC 100000PF 16V TAPE	0	
C499	AA01101R	CERAMIC CAPACITOR(1UF 10V-F)	0	0	C716	0251455R	CEM-470M160WCNT	0	
C543	0800326R	CAP.-ELECTRO. 100UF-M 16V	0	0	C717	0251455R	CEM-470M160WCNT	0	
C544	0800294R	CAP.-ELECTRO. 10UF-M(SMG) 50V	0	0	C718	0893179R	CAP.CHIP-CERAMIC 100000PF 16V TAPE	0	
C547	0800344R	CAP.-ELECTRO. 330UF-M(SMG) 16V	0	0	C719	0251455R	CEM-470M160WCNT	0	
C550	0893232R	CAP 1608CHIP 100000PFZF25V TAPE	0	0	C721	0251475R	CEM-100M500WCNT	0	
C551	0893239R	CAP 1608CHIP 10000PFZF 50V TAPE	0	0	C722	0251475R	CEM-100M500WCNT	0	
C552	0893239R	CAP 1608CHIP 10000PFZF 50V TAPE	0	0	C731	0893179R	CAP.CHIP-CERAMIC 100000PF 16V TAPE	0	
C575	0800326R	CAP.-ELECTRO. 100UF-M 16V	0	0	C732	0893179R	CAP.CHIP-CERAMIC 100000PF 16V TAPE	0	
C576	0800326R	CAP.-ELECTRO. 100UF-M 16V	0	0	C734	0893179R	CAP.CHIP-CERAMIC 100000PF 16V TAPE	0	
C577	0800326R	CAP.-ELECTRO. 100UF-M 16V	0	0	C735	0251455R	CEM-470M160WCNT	0	
C578	0800326R	CAP.-ELECTRO. 100UF-M 16V	0	0	C736	0893179R	CAP.CHIP-CERAMIC 100000PF 16V TAPE	0	
C579	0800326R	CAP.-ELECTRO. 100UF-M 16V	0	0	C737	0893179R	CAP.CHIP-CERAMIC 100000PF 16V TAPE	0	
C582	0800326R	CAP.-ELECTRO. 100UF-M 16V	0	0	C738	0893179R	CAP.CHIP-CERAMIC 100000PF 16V TAPE	0	
C583	0893232R	CAP 1608CHIP 100000PFZF25V TAPE	0	0	C739	0893179R	CAP.CHIP-CERAMIC 100000PF 16V TAPE	0	
C591	0800353R	CAP.-ELECTRO.470UF-M 16V	0	0	C740	0893179R	CAP.CHIP-CERAMIC 100000PF 16V TAPE	0	
C592	0893232R	CAP 1608CHIP 100000PFZF25V TAPE	0	0	C741	0251455R	CEM-470M160WCNT	0	
C593	0893232R	CAP 1608CHIP 100000PFZF25V TAPE	0	0	C742	0893179R	CAP.CHIP-CERAMIC 100000PF 16V TAPE	0	
C601	0893232R	CAP 1608CHIP 100000PFZF25V TAPE	0	0	C743	0893179R	CAP.CHIP-CERAMIC 100000PF 16V TAPE	0	
C602	0251448R	CEM-101M6R3WCNT	0	0	C744	0893179R	CAP.CHIP-CERAMIC 100000PF 16V TAPE	0	
C603	0893232R	CAP 1608CHIP 100000PFZF25V TAPE	0	0	C745	0893179R	CAP.CHIP-CERAMIC 100000PF 16V TAPE	0	
C604	0893232R	CAP 1608CHIP 100000PFZF25V TAPE	0	0	C746	0893179R	CAP.CHIP-CERAMIC 100000PF 16V TAPE	0	
C605	0893232R	CAP 1608CHIP 100000PFZF25V TAPE	0	0	C747	0893179R	CAP.CHIP-CERAMIC 100000PF 16V TAPE	0	
C609	0893179R	CAP.CHIP-CERAMIC 100000PF 16V TAPE	0		C748	0893179R	CAP.CHIP-CERAMIC 100000PF 16V TAPE	0	
C609	0893179R	CAP.CHIP-CERAMIC 100000PF 16V TAPE		0	C749	0893179R	CAP.CHIP-CERAMIC 100000PF 16V TAPE	0	
C610	0893193R	CAP 1608CHIP 10000PFKB 25V TAPE	0		C750	0251448R	CEM-101M6R3WCNT		0
C610	0893193R	CAP 1608CHIP 10000PFKB 25V TAPE		0	C750	0893179R	CAP.CHIP-CERAMIC 100000PF 16V TAPE	0	
C611	0251475R	CEM-100M500WCNT	0		C751	AA01113R	CCC225K06-B-16CT		0
C611	0251475R	CEM-100M500WCNT	0		C751	0893179R	CAP.CHIP-CERAMIC 100000PF 16V TAPE	0	
C612	0893179R	CAP.CHIP-CERAMIC 100000PF 16V TAPE		0	C752	0893193R	CAP 1608CHIP 10000PFKB 25V TAPE		0
C612	0893179R	CAP.CHIP-CERAMIC 100000PF 16V TAPE	0		C752	0893179R	CAP.CHIP-CERAMIC 100000PF 16V TAPE	0	
C615	0251475R	CEM-100M500WCNT		0	C753	0893193R	CAP 1608CHIP 10000PFKB 25V TAPE		0
C615	0251475R	CEM-100M500WCNT	0		C753	0893179R	CAP.CHIP-CERAMIC 100000PF 16V TAPE	0	
C616	0893232R	CAP 1608CHIP 100000PFZF25V TAPE		0	C754	0893193R	CAP 1608CHIP 10000PFKB 25V TAPE		0
C616	0893232R	CAP 1608CHIP 100000PFZF25V TAPE	0		C754	0893179R	CAP.CHIP-CERAMIC 100000PF 16V TAPE	0	
C617	0251448R	CEM-101M6R3WCNT		0	C755	0893193R	CAP 1608CHIP 10000PFKB 25V TAPE		0
C617	0251448R	CEM-101M6R3WCNT	0		C755	0893179R	CAP.CHIP-CERAMIC 100000PF 16V TAPE	0	
C618	0893232R	CAP 1608CHIP 100000PFZF25V TAPE		0	C756	0893193R	CAP 1608CHIP 10000PFKB 25V TAPE		0
C618	0893232R	CAP 1608CHIP 100000PFZF25V TAPE	0		C756	0893179R	CAP.CHIP-CERAMIC 100000PF 16V TAPE	0	
C619	0893179R	CAP.CHIP-CERAMIC 100000PF 16V TAPE		0	C757	0893193R	CAP 1608CHIP 10000PFKB 25V TAPE		0
C619	0893179R	CAP.CHIP-CERAMIC 100000PF 16V TAPE	0		C757	0893179R	CAP.CHIP-CERAMIC 100000PF 16V TAPE	0	
C620	0893232R	CAP 1608CHIP 100000PFZF25V TAPE		0	C758	AA01113R	CCC225K06-B-16CT		0
C620	0893232R	CAP 1608CHIP 100000PFZF25V TAPE	0		C758	0893179R	CAP.CHIP-CERAMIC 100000PF 16V TAPE	0	
C621	0251448R	CEM-101M6R3WCNT		0	C759	0251448R	CEM-101M6R3WCNT		0
C621	0251448R	CEM-101M6R3WCNT	0		C759	0893179R	CAP.CHIP-CERAMIC 100000PF 16V TAPE	0	
C622	0893232R	CAP 1608CHIP 100000PFZF25V TAPE		0	C760	0251448R	CEM-101M6R3WCNT		0
C622	0893232R	CAP 1608CHIP 100000PFZF25V TAPE	0		C760	0251455R	CEM-470M160WCNT	0	
C623	0251448R	CEM-101M6R3WCNT		0	C761	AA01113R	CCC225K06-B-16CT		0
C623	0251448R	CEM-101M6R3WCNT	0		C761	0893179R	CAP.CHIP-CERAMIC 100000PF 16V TAPE	0	
C624	0893232R	CAP 1608CHIP 100000PFZF25V TAPE		0	C762	0893193R	CAP 1608CHIP 10000PFKB 25V TAPE		0
C624	0893232R	CAP 1608CHIP 100000PFZF25V TAPE	0		C762	0893179R	CAP.CHIP-CERAMIC 100000PF 16V TAPE	0	
C625	0251448R	CEM-101M6R3WCNT		0	C763	0893193R	CAP 1608CHIP 10000PFKB 25V TAPE		0
C625	0251448R	CEM-101M6R3WCNT	0		C763	0251455R	CEM-470M160WCNT	0	
C626	0893232R	CAP 1608CHIP 100000PFZF25V TAPE		0	C764	0893193R	CAP 1608CHIP 10000PFKB 25V TAPE		0
C626	0893232R	CAP 1608CHIP 100000PFZF25V TAPE	0		C765	0893193R	CAP 1608CHIP 10000PFKB 25V TAPE		0
C627	0251448R	CEM-101M6R3WCNT		0	C765	0893179R	CAP.CHIP-CERAMIC 100000PF 16V TAPE	0	
C627	0251448R	CEM-101M6R3WCNT	0		C766	0893193R	CAP 1608CHIP 10000PFKB 25V TAPE		0
C700	0893179R	CAP.CHIP-CERAMIC 100000PF 16V TAPE		0	C766	0893179R	CAP.CHIP-CERAMIC 100000PF 16V TAPE	0	
C701	0893179R	CAP.CHIP-CERAMIC 100000PF 16V TAPE		0	C767	0893193R	CAP 1608CHIP 10000PFKB 25V TAPE		0

PRODUCT SERVICE NOTE: Components marked with a ⚠ have special characteristics important to safety. Before replacing any of these components, read carefully, the PRODUCT SAFETY NOTICE of this Service Manual. Don't degrade the safety of the receiver through improper servicing.

SYMBOL NO.	PART NO.	PART DESCRIPTION	50"	60"	SYMBOL NO.	PART NO.	PART DESCRIPTION	50"	60"
C767	0893179R	CAP.CHIP-CERAMIC 100000PF 16V TAPE	0		C7E3	AA01144R	CERAMIC CAP. 1608-B 1.0UF 16V		0
C768	0893193R	CAP 1608CHIP 10000PFKB 25V TAPE		0	C7E4	AA01347R	CERAMIC CAPACITOR(0.1UF 25V-B)		0
C768	0893179R	CAP.CHIP-CERAMIC 100000PF 16V TAPE	0		C7E5	0251455R	CEM-470M160WCNT		0
C769	0893193R	CAP 1608CHIP 10000PFKB 25V TAPE		0	C7E5	0251455R	CEM-470M160WCNT	0	
C769	0251473R	CEM-4R7M500WCNT	0		C7E6	0251473R	CEM-4R7M500WCNT		0
C770	AA01113R	CCC225K06-B-16CT		0	C7F0	0251455R	CEM-470M160WCNT		0
C770	0893179R	CAP.CHIP-CERAMIC 100000PF 16V TAPE	0		C7F1	0251455R	CEM-470M160WCNT		0
C771	0251448R	CEM-101M6R3WCNT		0	C7F2	0893179R	CAP.CHIP-CERAMIC 100000PF 16V TAPE		0
C771	0251475R	CEM-100M500WCNT	0		C7F3	AA01347R	CERAMIC CAPACITOR(0.1UF 25V-B)		0
C772	0893179R	CAP.CHIP-CERAMIC 100000PF 16V TAPE		0	C7F4	AA01347R	CERAMIC CAPACITOR(0.1UF 25V-B)		0
C772	0893179R	CAP.CHIP-CERAMIC 100000PF 16V TAPE	0		C7F4	0893179R	CAP.CHIP-CERAMIC 100000PF 16V TAPE	0	
C773	0893193R	CAP 1608CHIP 10000PFKB 25V TAPE		0	C7F5	AA01347R	CERAMIC CAPACITOR(0.1UF 25V-B)		0
C773	0251473R	CEM-4R7M500WCNT	0		C7F5	0251473R	CEM-4R7M500WCNT	0	
C774	0893179R	CAP.CHIP-CERAMIC 100000PF 16V TAPE		0	C7F6	0893222R	CAP 1608CHIP10000PFKB 50V TAPE		0
C774	0893179R	CAP.CHIP-CERAMIC 100000PF 16V TAPE	0		C7F7	0893208R	CAP 1608CHIP 1000PFKB 50V TAPE		0
C775	0251448R	CEM-101M6R3WCNT		0	C7F7	0893179R	CAP.CHIP-CERAMIC 100000PF 16V TAPE	0	
C775	0893179R	CAP.CHIP-CERAMIC 100000PF 16V TAPE	0		C7F8	AA01347R	CERAMIC CAPACITOR(0.1UF 25V-B)		0
C776	0893179R	CAP.CHIP-CERAMIC 100000PF 16V TAPE		0	C7F8	0251475R	CEM-100M500WCNT	0	
C776	0893179R	CAP.CHIP-CERAMIC 100000PF 16V TAPE	0		C7F9	0893179R	CAP.CHIP-CERAMIC 100000PF 16V TAPE	0	0
C777	0251455R	CEM-470M160WCNT	0		C7G0	AA01347R	CERAMIC CAPACITOR(0.1UF 25V-B)		0
C778	0893179R	CAP.CHIP-CERAMIC 100000PF 16V TAPE	0		C7G1	0893222R	CAP 1608CHIP10000PFKB 50V TAPE		0
C779	0893179R	CAP.CHIP-CERAMIC 100000PF 16V TAPE	0		C7G1	0251473R	CEM-4R7M500WCNT	0	
C780	0251473R	CEM-4R7M500WCNT	0		C7G2	0893222R	CAP 1608CHIP10000PFKB 50V TAPE		0
C781	0893179R	CAP.CHIP-CERAMIC 100000PF 16V TAPE	0		C7G2	0893179R	CAP.CHIP-CERAMIC 100000PF 16V TAPE	0	
C782	0251475R	CEM-100M500WCNT	0		C7G3	0251455R	CEM-470M160WCNT		0
C783	0893179R	CAP.CHIP-CERAMIC 100000PF 16V TAPE	0		C7G3	0893179R	CAP.CHIP-CERAMIC 100000PF 16V TAPE	0	
C784	0893179R	CAP.CHIP-CERAMIC 100000PF 16V TAPE	0		C7G4	AA01347R	CERAMIC CAPACITOR(0.1UF 25V-B)		0
C785	0251473R	CEM-4R7M500WCNT	0		C7G4	0893179R	CAP.CHIP-CERAMIC 100000PF 16V TAPE	0	
C786	0893179R	CAP.CHIP-CERAMIC 100000PF 16V TAPE	0		C7G5	AA01347R	CERAMIC CAPACITOR(0.1UF 25V-B)		0
C787	0251473R	CEM-4R7M500WCNT	0		C7G5	0251455R	CEM-470M160WCNT	0	
C788	0893179R	CAP.CHIP-CERAMIC 100000PF 16V TAPE	0		C7G6	AA01347R	CERAMIC CAPACITOR(0.1UF 25V-B)		0
C791	0893179R	CAP.CHIP-CERAMIC 100000PF 16V TAPE	0		C7G6	0893179R	CAP.CHIP-CERAMIC 100000PF 16V TAPE	0	
C792	0251448R	CEM-101M6R3WCNT	0		C7G7	AA01347R	CERAMIC CAPACITOR(0.1UF 25V-B)		0
C793	0893179R	CAP.CHIP-CERAMIC 100000PF 16V TAPE	0		C7G7	0251473R	CEM-4R7M500WCNT	0	
C799	0893179R	CAP.CHIP-CERAMIC 100000PF 16V TAPE	0		C7G8	AA01347R	CERAMIC CAPACITOR(0.1UF 25V-B)		0
C7A0	0251455R	CEM-470M160WCNT		0	C7G8	0893179R	CAP.CHIP-CERAMIC 100000PF 16V TAPE	0	
C7A1	0251455R	CEM-470M160WCNT		0	C7G9	AA01347R	CERAMIC CAPACITOR(0.1UF 25V-B)		0
C7A1	0251473R	CEM-4R7M500WCNT	0		C7G9	0893179R	CAP.CHIP-CERAMIC 100000PF 16V TAPE	0	
C7A2	0893179R	CAP.CHIP-CERAMIC 100000PF 16V TAPE		0	C7H0	AA01144R	CERAMIC CAP. 1608-B 1.0UF 16V		0
C7A3	AA01347R	CERAMIC CAPACITOR(0.1UF 25V-B)		0	C7H1	AA01347R	CERAMIC CAPACITOR(0.1UF 25V-B)		0
C7A3	0251475R	CEM-100M500WCNT	0		C7H1	0251475R	CEM-100M500WCNT	0	
C7A4	AA01347R	CERAMIC CAPACITOR(0.1UF 25V-B)	0	0	C7H2	0251455R	CEM-470M160WCNT		0
C7A5	AA01347R	CERAMIC CAPACITOR(0.1UF 25V-B)		0	C7H2	0893179R	CAP.CHIP-CERAMIC 100000PF 16V TAPE	0	
C7A5	0893179R	CAP.CHIP-CERAMIC 100000PF 16V TAPE	0		C7H3	0251473R	CEM-4R7M500WCNT		0
C7A6	0893222R	CAP 1608CHIP10000PFKB 50V TAPE		0	C7H3	0893179R	CAP.CHIP-CERAMIC 100000PF 16V TAPE	0	
C7A6	0251473R	CEM-4R7M500WCNT	0		C7H4	0893179R	CAP.CHIP-CERAMIC 100000PF 16V TAPE	0	
C7A7	0893208R	CAP 1608CHIP 1000PFKB 50V TAPE		0	C7H5	0893179R	CAP.CHIP-CERAMIC 100000PF 16V TAPE	0	0
C7A8	AA01347R	CERAMIC CAPACITOR(0.1UF 25V-B)		0	C7H6	0251473R	CEM-4R7M500WCNT	0	
C7A8	0893179R	CAP.CHIP-CERAMIC 100000PF 16V TAPE	0		C7H7	0893179R	CAP.CHIP-CERAMIC 100000PF 16V TAPE	0	
C7A9	0893179R	CAP.CHIP-CERAMIC 100000PF 16V TAPE		0	C7H8	0251473R	CEM-4R7M500WCNT	0	
C7A9	0251455R	CEM-470M160WCNT	0		C7J2	0893179R	CAP.CHIP-CERAMIC 100000PF 16V TAPE	0	
C7C0	AA01347R	CERAMIC CAPACITOR(0.1UF 25V-B)		0	C7J3	0251455R	CEM-470M160WCNT	0	
C7C1	0893222R	CAP 1608CHIP10000PFKB 50V TAPE		0	C7J5	0893179R	CAP.CHIP-CERAMIC 100000PF 16V TAPE	0	
C7C1	0893179R	CAP.CHIP-CERAMIC 100000PF 16V TAPE	0		C7J6	0251455R	CEM-470M160WCNT	0	
C7C2	0893222R	CAP 1608CHIP10000PFKB 50V TAPE		0	C7K0	0251455R	CEM-470M160WCNT		0
C7C2	0251473R	CEM-4R7M500WCNT	0		C7K1	0251455R	CEM-470M160WCNT		0
C7C3	0251455R	CEM-470M160WCNT		0	C7K2	0893179R	CAP.CHIP-CERAMIC 100000PF 16V TAPE		0
C7C3	0893179R	CAP.CHIP-CERAMIC 100000PF 16V TAPE	0		C7K3	AA01347R	CERAMIC CAPACITOR(0.1UF 25V-B)		0
C7C4	AA01347R	CERAMIC CAPACITOR(0.1UF 25V-B)		0	C7K4	AA01347R	CERAMIC CAPACITOR(0.1UF 25V-B)		0
C7C4	0893179R	CAP.CHIP-CERAMIC 100000PF 16V TAPE	0		C7K5	AA01347R	CERAMIC CAPACITOR(0.1UF 25V-B)		0
C7C5	AA01347R	CERAMIC CAPACITOR(0.1UF 25V-B)		0	C7K6	0893222R	CAP 1608CHIP10000PFKB 50V TAPE		0
C7C5	0251475R	CEM-100M500WCNT	0		C7K7	0893208R	CAP 1608CHIP 1000PFKB 50V TAPE		0
C7C6	AA01347R	CERAMIC CAPACITOR(0.1UF 25V-B)		0	C7K8	AA01347R	CERAMIC CAPACITOR(0.1UF 25V-B)		0
C7C6	0893179R	CAP.CHIP-CERAMIC 100000PF 16V TAPE	0		C7K9	0893179R	CAP.CHIP-CERAMIC 100000PF 16V TAPE		0
C7C7	AA01347R	CERAMIC CAPACITOR(0.1UF 25V-B)		0	C7L0	AA01347R	CERAMIC CAPACITOR(0.1UF 25V-B)		0
C7C7	0893179R	CAP.CHIP-CERAMIC 100000PF 16V TAPE	0		C7L1	0893222R	CAP 1608CHIP10000PFKB 50V TAPE		0
C7C8	AA01347R	CERAMIC CAPACITOR(0.1UF 25V-B)		0	C7L2	0893222R	CAP 1608CHIP10000PFKB 50V TAPE		0
C7C8	0893179R	CAP.CHIP-CERAMIC 100000PF 16V TAPE	0		C7L3	0251455R	CEM-470M160WCNT		0
C7C9	AA01347R	CERAMIC CAPACITOR(0.1UF 25V-B)		0	C7L4	AA01347R	CERAMIC CAPACITOR(0.1UF 25V-B)		0
C7C9	0251473R	CEM-4R7M500WCNT	0		C7L5	AA01347R	CERAMIC CAPACITOR(0.1UF 25V-B)		0
C7E0	AA01347R	CERAMIC CAPACITOR(0.1UF 25V-B)		0	C7L6	AA01347R	CERAMIC CAPACITOR(0.1UF 25V-B)		0
C7E1	AA01347R	CERAMIC CAPACITOR(0.1UF 25V-B)		0	C7L7	AA01347R	CERAMIC CAPACITOR(0.1UF 25V-B)		0
C7E1	0893179R	CAP.CHIP-CERAMIC 100000PF 16V TAPE	0		C7L8	AA01347R	CERAMIC CAPACITOR(0.1UF 25V-B)		0
C7E2	AA01347R	CERAMIC CAPACITOR(0.1UF 25V-B)		0	C7L9	AA01347R	CERAMIC CAPACITOR(0.1UF 25V-B)		0
C7E2	0251473R	CEM-4R7M500WCNT	0		C7M0	AA01144R	CERAMIC CAP. 1608-B 1.0UF 16V		0

PRODUCT SERVICE NOTE: Components marked with a ⚠ have special characteristics important to safety. Before replacing any of these components, read carefully, the PRODUCT SAFETY NOTICE of this Service Manual. Don't degrade the safety of the receiver through improper servicing.

SYMBOL NO.	PART NO.	PART DESCRIPTION	50"	60"	SYMBOL NO.	PART NO.	PART DESCRIPTION	50"	60"
C7M1	AA01347R	CERAMIC CAPACITOR(0.1UF 25V-B)		0	C956	0800363N	CAP.-ELECTRO. 1000UF-M 35V	0	0
C7M2	0251455R	CEM-470M160WCNT		0	C957	0243511R	CAP.-CERAMIC 680PF-K 500V TAPE	0	0
C7M3	0251473R	CEM-4R7M500WCNT		0	C958	AL01849R	1000UF 16V ALUMINIUM ELECTROLYTIC CAPACITOR	0	0
C7M6	0893179R	CAP.CHIP-CERAMIC 100000PF 16V TAPE		0	C959	0800361N	CAP.-ELECTRO 1000UF 16V	0	0
C7M8	0893179R	CAP.CHIP-CERAMIC 100000PF 16V TAPE		0	C960	AL01833R	1000UF 6.3V ALUMINIUM ELECTROLYTIC CAPACITOR	0	0
C7M9	0893179R	CAP.CHIP-CERAMIC 100000PF 16V TAPE		0	C962	0800346R	CAP.-ELECTRO 330UF 35V	0	0
C7N0	AA01347R	CERAMIC CAPACITOR(0.1UF 25V-B)		0	C963	0890087R	CAP.-CERAMIC 1000PF-K 50V	0	0
C7N1	0893179R	CAP.CHIP-CERAMIC 100000PF 16V TAPE		0	C964	AL01118S	CAP.ELECTROLYTIC 2200UF-M(YXF)10V	0	0
C7N2	0893179R	CAP.CHIP-CERAMIC 100000PF 16V TAPE		0	C965	AL01118S	CAP.ELECTROLYTIC 2200UF-M(YXF)10V	0	0
C7N3	0893179R	CAP.CHIP-CERAMIC 100000PF 16V TAPE		0	C966	0890087R	CAP.-CERAMIC 1000PF-K 50V	0	0
C800	AA01347R	CERAMIC CAPACITOR(0.1UF 25V-B)		0	C967	0800346R	CAP.-ELECTRO 330UF 35V	0	0
C800	0251448R	CEM-101M6R3WCNT	0		C968	0279693R	CAP.-POLYESTER FLM 0.1UF	0	0
C801	0893179R	CAP.CHIP-CERAMIC 100000PF 16V TAPE		0	C969	0880194R	CAP.-POLYESTER 0.1UF-J 50V	0	0
C801	0251448R	CEM-101M6R3WCNT	0		C970	0800319R	CAP.-ELECTRO. 47UF-M 35V	0	0
C802	0893179R	CAP.CHIP-CERAMIC 100000PF 16V TAPE		0	C971	0800334R	CAP.-ELECTRO. 220UF 10V	0	0
C802	0251455R	CEM-470M160WCNT	0		C972	0800326R	CAP.-ELECTRO. 100UF-M 16V	0	0
C803	0251448R	CEM-101M6R3WCNT		0	C973	0243511R	CAP.-CERAMIC 680PF-K 500V TAPE	0	0
C803	0251475R	CEM-100M500WCNT	0		C974	AL01153S	CAP.ELECTR. 1000UF-M 35V	0	0
C804	0893179R	CAP.CHIP-CERAMIC 100000PF 16V TAPE		0	C976	0800346R	CAP.-ELECTRO 330UF 35V	0	0
C804	0251475R	CEM-100M500WCNT	0		C978	0800346R	CAP.-ELECTRO 330UF 35V	0	0
C805	0251455R	CEM-470M160WCNT		0	C982	0880053R	CAP.-POLYESTER 0.047UF-KEB 50V	0	0
C805	0893179R	CAP.CHIP-CERAMIC 100000PF 16V TAPE	0		C983	0880194R	CAP.-POLYESTER 0.1UF-J 50V	0	0
C806	0251448R	CEM-101M6R3WCNT		0	C984	0880194R	CAP.-POLYESTER 0.1UF-J 50V	0	0
C806	0893179R	CAP.CHIP-CERAMIC 100000PF 16V TAPE	0		C985	0880194R	CAP.-POLYESTER 0.1UF-J 50V	0	0
C807	0893179R	CAP.CHIP-CERAMIC 100000PF 16V TAPE	0	0	C986	0880042R	CAP.-POLYESTER 0.0068UF-KEB50V	0	0
C808	0251455R	CEM-470M160WCNT		0	C987	0880042R	CAP.-POLYESTER 0.0068UF-KEB50V	0	0
C808	0893179R	CAP.CHIP-CERAMIC 100000PF 16V TAPE	0		C988	0890087R	CAP.-CERAMIC 1000PF-K 50V	0	0
C809	0251455R	CEM-470M160WCNT		0	C989	AJ00173F	CAP.CERAMIC CD85-B2GA221KYNS		0
C809	0893179R	CAP.CHIP-CERAMIC 100000PF 16V TAPE	0		C989	AJ00173F	CAP.CERAMIC CD85-B2GA221KYNS	0	
C810	0893179R	CAP.CHIP-CERAMIC 100000PF 16V TAPE		0	C990	0880194R	CAP.-POLYESTER 0.1UF-J 50V	0	0
C811	0251455R	CEM-470M160WCNT		0	C992	AL01153S	CAP.ELECTR. 1000UF-M 35V	0	0
C812	0251455R	CEM-470M160WCNT		0	C9Z1	0880194R	CAP.-POLYESTER 0.1UF-J 50V	0	0
C813	0893179R	CAP.CHIP-CERAMIC 100000PF 16V TAPE		0	CA01	0284638R	CAP.-ELECTRO. 10UF-SME(BP) 16V	0	0
C814	0251448R	CEM-101M6R3WCNT		0	CA02	0893215R	CAP 1608CHIP 3300PFKB 50V TAPE	0	0
C820	AA01101R	CERAMIC CAPACITOR(1UF 10V-F)	0		CA03	0893186R	CERAMIC CAPACITOR(33000PF 16V)	0	0
C825	0251475R	CEM-100M500WCNT		0	CA04	0893217R	CAP 1608CHIP 4700PFKB 50V TAPE	0	0
C826	AA01347R	CERAMIC CAPACITOR(0.1UF 25V-B)		0	CA05	0893232R	CAP 1608CHIP 100000PFZF25V TAPE	0	0
C827	0251455R	CEM-470M160WCNT		0	CA07	0893221R	CAP 1608CHIP 8200PFKB 50V TAPE	0	0
C836	0251455R	CEM-470M160WCNT		0	CA08	0893186R	CERAMIC CAPACITOR(33000PF 16V)	0	0
C837	0893179R	CAP.CHIP-CERAMIC 100000PF 16V TAPE		0	CA09	AA00936R	CERAMIC CAP. 2125-X5R 4.7UF 10V	0	0
C838	0251455R	CEM-470M160WCNT		0	CA10	AA00936R	CERAMIC CAP. 2125-X5R 4.7UF 10V	0	0
⚠ C901	AN02085S	PLASTIC FILM CAP.CQ-224K251PVS-LE	0	0	CA11	AA00936R	CERAMIC CAP. 2125-X5R 4.7UF 10V	0	0
⚠ C902	AN02083S	PLASTIC FILM CAP.CQ-104K251PVS-LE	0	0	CA12	0800326R	CAP.-ELECTRO. 100UF-M 16V	0	0
C905	AL00016R	ALUMINIUM ELECTROLYTIC CAPACITOR(10UF200V)	0	0	CA13	0893232R	CAP 1608CHIP 100000PFZF25V TAPE	0	0
C906	AL00016R	ALUMINIUM ELECTROLYTIC CAPACITOR(10UF200V)	0	0	CA14	0284638R	CAP.-ELECTRO. 10UF-SME(BP) 16V	0	0
C907	AL02762	CAP.ELEC. 680UF 200V MXC SERIES	0	0	CA15	0893215R	CAP 1608CHIP 3300PFKB 50V TAPE	0	0
⚠ C912	AJ00167F	CAP.CERAMIC CS12-F2GA472MYNS	0	0	CA16	0893186R	CERAMIC CAPACITOR(33000PF 16V)	0	0
C913	AJ00167F	CAP.CERAMIC CS12-F2GA472MYNS	0	0	CA17	0893217R	CAP 1608CHIP 4700PFKB 50V TAPE	0	0
C922	0800337R	CAP.-ELECTRO 220UF 35V (SMG TY PE)	0	0	CA18	0893232R	CAP 1608CHIP 100000PFZF25V TAPE	0	0
C924	0880194R	CAP.-POLYESTER 0.1UF-J 50V	0	0	CA20	AA01101R	CERAMIC CAPACITOR(1UF 10V-F)	0	0
C925	AN01631F	1000PF1500VMETALLIZ POLYPROPYLENE FILM CAPA	0	0	CA21	0893184R	CERAMIC CAPACITOR(22000PF 16V)	0	0
C927	0890085R	CAP.-CERAMIC 680PF-K 50V	0	0	CA22	AA00936R	CERAMIC CAP. 2125-X5R 4.7UF 10V	0	0
C928	0244105R	CAP.-CERAMIC 2200PF-K 50V TAPE	0	0	CA23	AA00936R	CERAMIC CAP. 2125-X5R 4.7UF 10V	0	0
C929	0244105R	CAP.-CERAMIC 2200PF-K 50V TAPE	0	0	CA26	0800279R	CAP.-ELECTORO. 1.0UF-M(SMG) 50V	0	0
⚠ C930	AJ00182F	CAP. CERAMIC CD85-E2GA102MYNS	0	0	CA27	0800279R	CAP.-ELECTORO. 1.0UF-M(SMG) 50V	0	0
⚠ C931	AJ00183F	CAP. CERAMIC CD10-E2GA152MYNS	0	0	CA29	0800294R	CAP.-ELECTRO. 10UF-M(SMG) 50V	0	0
⚠ C932	AJ00183F	CAP. CERAMIC CD10-E2GA152MYNS	0	0	CA30	AA00936R	CERAMIC CAP. 2125-X5R 4.7UF 10V	0	0
C933	0880194R	CAP.-POLYESTER 0.1UF-J 50V	0	0	CA33	AA00936R	CERAMIC CAP. 2125-X5R 4.7UF 10V	0	0
C934	0800353R	CAP.-ELECTRO.470UF-M 16V	0	0	CA51	0800294R	CAP.-ELECTRO. 10UF-M(SMG) 50V	0	0
C935	0800359R	CAP.-ELECTRO. 1000UF-M 10V	0	0	CA52	0800294R	CAP.-ELECTRO. 10UF-M(SMG) 50V	0	0
C937	0800363N	CAP.-ELECTRO. 1000UF-M 35V	0	0	CA53	0284638R	CAP.-ELECTRO. 10UF-SME(BP) 16V	0	0
C938	0800363N	CAP.-ELECTRO. 1000UF-M 35V	0	0	CA54	0800294R	CAP.-ELECTRO. 10UF-M(SMG) 50V	0	0
C940	AL02762	CAP.ELEC. 680UF 200V MXC SERIES	0	0	CA55	0800294R	CAP.-ELECTRO. 10UF-M(SMG) 50V	0	0
C942	0800319R	CAP.-ELECTRO. 47UF-M 35V	0	0	CA56	0284638R	CAP.-ELECTRO. 10UF-SME(BP) 16V	0	0
C943	0243511R	CAP.-CERAMIC 680PF-K 500V TAPE	0	0	CA57	0800294R	CAP.-ELECTRO. 10UF-M(SMG) 50V	0	0
C945	AL01153S	CAP.ELECTR. 1000UF-M 35V	0	0	CA58	0893232R	CAP 1608CHIP 100000PFZF25V TAPE	0	0
C946	0243511R	CAP.-CERAMIC 680PF-K 500V TAPE	0	0	CA59	0800326R	CAP.-ELECTRO. 100UF-M 16V	0	0
C947	0800338R	CAP.ELECTRO.220UF-M 50V(SMG)	0	0	CA61	0893232R	CAP 1608CHIP 100000PFZF25V TAPE	0	0
C948	0244105R	CAP.-CERAMIC 2200PF-K 50V TAPE	0	0	CA62	0893232R	CAP 1608CHIP 100000PFZF25V TAPE	0	0
C949	0880044R	CAP.-POLYESTER 0.01UF-KEB 50V	0	0	CA63	0800326R	CAP.-ELECTRO. 100UF-M 16V	0	0
C950	0243511R	CAP.-CERAMIC 680PF-K 500V TAPE	0	0	CA64	0893188R	CERAMIC CAPACITOR(47000PF 16V)	0	0
C951	AL01153S	CAP.ELECTR. 1000UF-M 35V	0	0	CA65	0893188R	CERAMIC CAPACITOR(47000PF 16V)	0	0
C953	0800279R	CAP.-ELECTORO. 1.0UF-M(SMG) 50V	0	0	CA66	0893188R	CERAMIC CAPACITOR(47000PF 16V)	0	0
C954	0800363N	CAP.-ELECTRO. 1000UF-M 35V	0	0	CA67	0893188R	CERAMIC CAPACITOR(47000PF 16V)	0	0
C955	0800363N	CAP.-ELECTRO. 1000UF-M 35V	0	0	CA68	0800279R	CAP.-ELECTORO. 1.0UF-M(SMG) 50V	0	0

PRODUCT SERVICE NOTE: Components marked with a ⚠ have special characteristics important to safety. Before replacing any of these components, read carefully, the PRODUCT SAFETY NOTICE of this Service Manual. Don't degrade the safety of the receiver through improper servicing.

SYMBOL NO.	PART NO.	PART DESCRIPTION	50"	60"	SYMBOL NO.	PART NO.	PART DESCRIPTION	50"	60"
CA69	0800279R	CAP.-ELECTORO. 1.0UF-M(SMG) 50V	0	0	CE05	0893126R	CAP 1608CHIP 100PFJCH 50V TAPE	0	0
CAA1	0800318R	CAP.-ELECTRO. 47UF-M 25V	0	0	CE06	0893126R	CAP 1608CHIP 100PFJCH 50V TAPE	0	0
CAA2	0800279R	CAP.-ELECTORO. 1.0UF-M(SMG) 50V	0	0	CE07	0893126R	CAP 1608CHIP 100PFJCH 50V TAPE	0	0
CAA3	0890087R	CAP.-CERAMIC 1000PF-K 50V	0	0	CE08	0893179R	CAP.CHIP-CERAMIC 100000PF 16V TAPE	0	0
CAA4	0800279R	CAP.-ELECTORO. 1.0UF-M(SMG) 50V	0	0	CE09	0893179R	CAP.CHIP-CERAMIC 100000PF 16V TAPE	0	0
CAA5	0890087R	CAP.-CERAMIC 1000PF-K 50V	0	0	CE10	0893179R	CAP.CHIP-CERAMIC 100000PF 16V TAPE	0	0
CAA6	0800318R	CAP.-ELECTRO. 47UF-M 25V	0	0	CE11	0893179R	CAP.CHIP-CERAMIC 100000PF 16V TAPE	0	0
CAA7	0800328R	CAP. ELECTRO. 100UF-M 35V	0	0	CE12	0893179R	CAP.CHIP-CERAMIC 100000PF 16V TAPE	0	0
CAA8	0880194R	CAP.-POLYESTER 0.1UF-J 50V	0	0	CE13	0893179R	CAP.CHIP-CERAMIC 100000PF 16V TAPE	0	0
CAA9	AL01153S	CAP.ELECTR. 1000UF-M 35V	0	0	CE14	0893126R	CAP 1608CHIP 100PFJCH 50V TAPE	0	0
CAC2	0800318R	CAP.-ELECTRO. 47UF-M 25V	0	0	CE15	0893179R	CAP.CHIP-CERAMIC 100000PF 16V TAPE	0	0
CAC3	0800328R	CAP. ELECTRO. 100UF-M 35V	0	0	CE17	0800294R	CAP.-ELECTRO. 10UF-M(SMG) 50V	0	0
CAC4	0800279R	CAP.-ELECTORO. 1.0UF-M(SMG) 50V	0	0	CE18	0800294R	CAP.-ELECTRO. 10UF-M(SMG) 50V	0	0
CAC5	0800282R	CAP.-ELECTORO. 2.2UF-M(SMG) 50V	0	0	CE19	0800294R	CAP.-ELECTRO. 10UF-M(SMG) 50V	0	0
CAC6	0880194R	CAP.-POLYESTER 0.1UF-J 50V	0	0	CE20	0893179R	CAP.CHIP-CERAMIC 100000PF 16V TAPE	0	0
CAC7	0880194R	CAP.-POLYESTER 0.1UF-J 50V	0	0	CE21	0893179R	CAP.CHIP-CERAMIC 100000PF 16V TAPE	0	0
CAC8	0284824F	CAP.-ELECTRO. 2200UF 35V	0	0	CE22	0800326R	CAP.-ELECTRO. 100UF-M 16V	0	0
CAC9	0284824F	CAP.-ELECTRO. 2200UF 35V	0	0	CE28	0893179R	CAP.CHIP-CERAMIC 100000PF 16V TAPE	0	0
CAE1	0880181R	CAP.METAL-POLY.FLM 0.01UF 50V	0	0	CE45	0893179R	CAP.CHIP-CERAMIC 100000PF 16V TAPE	0	0
CAE2	0880181R	CAP.METAL-POLY.FLM 0.01UF 50V	0	0	CE46	0893179R	CAP.CHIP-CERAMIC 100000PF 16V TAPE	0	0
CAE3	0258616	CAP.-ELECTRO 2.2UF-M 50V	0		CE47	0893179R	CAP.CHIP-CERAMIC 100000PF 16V TAPE	0	0
CAE3	0258901	CAP.-ELECTRO 3.3UF-M 50V		0	CE48	0893179R	CAP.CHIP-CERAMIC 100000PF 16V TAPE	0	0
CAE4	0258616	CAP.-ELECTRO 2.2UF-M 50V	0		CE49	AA01111R	CERAMIC CAPACITOR(1.0UF 6.3V)	0	0
CAE4	0258901	CAP.-ELECTRO 3.3UF-M 50V		0	CE50	AA01111R	CERAMIC CAPACITOR(1.0UF 6.3V)	0	0
CAM1	0800318R	CAP.-ELECTRO. 47UF-M 25V	0	0	CE51	AA01111R	CERAMIC CAPACITOR(1.0UF 6.3V)	0	0
CAM2	0800279R	CAP.-ELECTORO. 1.0UF-M(SMG) 50V	0	0	CE52	AA01111R	CERAMIC CAPACITOR(1.0UF 6.3V)	0	0
CAM3	0890087R	CAP.-CERAMIC 1000PF-K 50V	0	0	CE53	AA01111R	CERAMIC CAPACITOR(1.0UF 6.3V)	0	0
CAM4	0800279R	CAP.-ELECTORO. 1.0UF-M(SMG) 50V	0	0	CE54	AA01111R	CERAMIC CAPACITOR(1.0UF 6.3V)	0	0
CAM5	0890087R	CAP.-CERAMIC 1000PF-K 50V	0	0	CE55	0893115R	CAP 1608CHIP 15PFJCH 50V TAPE	0	0
CAM6	0800318R	CAP.-ELECTRO. 47UF-M 25V	0	0	CJ05	0800358R	CAP.-ELECTRO. 1000UF-M 6.3V	0	0
CAM7	0800328R	CAP. ELECTRO. 100UF-M 35V	0	0	CJ06	0893232R	CAP 1608CHIP 100000PFZF25V TAPE	0	0
CAM8	0880194R	CAP.-POLYESTER 0.1UF-J 50V	0	0	CJ07	0893232R	CAP 1608CHIP 100000PFZF25V TAPE	0	0
CAM9	AL01153S	CAP.ELECTR. 1000UF-M 35V	0	0	CJ08	0800352R	CAP.-ELECTRO.470UF 10V	0	0
CAN2	0800318R	CAP.-ELECTRO. 47UF-M 25V	0	0	CJ09	0893232R	CAP 1608CHIP 100000PFZF25V TAPE	0	0
CAN3	0800328R	CAP. ELECTRO. 100UF-M 35V	0	0	CJ10	0800326R	CAP.-ELECTRO. 100UF-M 16V	0	0
CAN4	0800279R	CAP.-ELECTORO. 1.0UF-M(SMG) 50V	0	0	CJ12	0893232R	CAP 1608CHIP 100000PFZF25V TAPE	0	0
CAN5	0800282R	CAP.-ELECTORO. 2.2UF-M(SMG) 50V	0	0	CJ13	0800294R	CAP.-ELECTRO. 10UF-M(SMG) 50V	0	0
CAN6	0880194R	CAP.-POLYESTER 0.1UF-J 50V	0	0	CJ14	0893232R	CAP 1608CHIP 100000PFZF25V TAPE	0	0
CAN7	0880194R	CAP.-POLYESTER 0.1UF-J 50V	0	0	CJ15	0800294R	CAP.-ELECTRO. 10UF-M(SMG) 50V	0	0
CAN8	0284824F	CAP.-ELECTRO. 2200UF 35V	0	0	CJ16	0893232R	CAP 1608CHIP 100000PFZF25V TAPE	0	0
CAN9	0284824F	CAP.-ELECTRO. 2200UF 35V	0	0	CJ17	0800294R	CAP.-ELECTRO. 10UF-M(SMG) 50V	0	0
CAP1	0880181R	CAP.METAL-POLY.FLM 0.01UF 50V	0	0	CJ18	0893232R	CAP 1608CHIP 100000PFZF25V TAPE	0	0
CAP2	0880181R	CAP.METAL-POLY.FLM 0.01UF 50V	0	0	CJ19	0800294R	CAP.-ELECTRO. 10UF-M(SMG) 50V	0	0
CC01	0893179R	CAP.CHIP-CERAMIC 100000PF 16V TAPE	0	0	CJ20	0893232R	CAP 1608CHIP 100000PFZF25V TAPE	0	0
CC02	0800326R	CAP.-ELECTRO. 100UF-M 16V	0	0	CJ21	0800294R	CAP.-ELECTRO. 10UF-M(SMG) 50V	0	0
CC03	0800326R	CAP.-ELECTRO. 100UF-M 16V	0	0	CJ22	0893232R	CAP 1608CHIP 100000PFZF25V TAPE	0	0
CC04	0893179R	CAP.CHIP-CERAMIC 100000PF 16V TAPE	0	0	CJ23	0800294R	CAP.-ELECTRO. 10UF-M(SMG) 50V	0	0
CC05	0893179R	CAP.CHIP-CERAMIC 100000PF 16V TAPE	0	0	CJ24	0893232R	CAP 1608CHIP 100000PFZF25V TAPE	0	0
CC06	0893179R	CAP.CHIP-CERAMIC 100000PF 16V TAPE	0	0	CJ25	0893232R	CAP 1608CHIP 100000PFZF25V TAPE	0	0
CC07	0893179R	CAP.CHIP-CERAMIC 100000PF 16V TAPE	0	0	CJ26	0893232R	CAP 1608CHIP 100000PFZF25V TAPE	0	0
CC08	0893179R	CAP.CHIP-CERAMIC 100000PF 16V TAPE	0	0	CJ27	0800326R	CAP.-ELECTRO. 100UF-M 16V	0	0
CC09	0893179R	CAP.CHIP-CERAMIC 100000PF 16V TAPE	0	0	CJ28	0893232R	CAP 1608CHIP 100000PFZF25V TAPE	0	0
CC10	0893179R	CAP.CHIP-CERAMIC 100000PF 16V TAPE	0	0	CJ29	0893232R	CAP 1608CHIP 100000PFZF25V TAPE	0	0
CC11	0893126R	CAP 1608CHIP 100PFJCH 50V TAPE	0	0	CJ30	0800294R	CAP.-ELECTRO. 10UF-M(SMG) 50V	0	0
CC12	0893179R	CAP.CHIP-CERAMIC 100000PF 16V TAPE	0	0	CJ31	0893232R	CAP 1608CHIP 100000PFZF25V TAPE	0	0
CC14	0800294R	CAP.-ELECTRO. 10UF-M(SMG) 50V	0	0	CJ32	0893239R	CAP 1608CHIP 10000PFZF 50V TAPE	0	0
CC15	0800294R	CAP.-ELECTRO. 10UF-M(SMG) 50V	0	0	CJ33	0800294R	CAP.-ELECTRO. 10UF-M(SMG) 50V	0	0
CC16	0800294R	CAP.-ELECTRO. 10UF-M(SMG) 50V	0	0	CJ34	0893126R	CAP 1608CHIP 100PFJCH 50V TAPE	0	0
CC17	0893179R	CAP.CHIP-CERAMIC 100000PF 16V TAPE	0	0	CJ35	0893126R	CAP 1608CHIP 100PFJCH 50V TAPE	0	0
CC18	0893179R	CAP.CHIP-CERAMIC 100000PF 16V TAPE	0	0	CJ36	0893126R	CAP 1608CHIP 100PFJCH 50V TAPE	0	0
CC20	0893213R	CAP1608CHIP 2200PFKB 50V TAPE	0	0	CJ37	0893232R	CAP 1608CHIP 100000PFZF25V TAPE	0	0
CC21	0893179R	CAP.CHIP-CERAMIC 100000PF 16V TAPE	0	0	CJ38	0893232R	CAP 1608CHIP 100000PFZF25V TAPE	0	0
CC22	0800326R	CAP.-ELECTRO. 100UF-M 16V	0	0	CJ39	0893232R	CAP 1608CHIP 100000PFZF25V TAPE	0	0
CC24	0893213R	CAP1608CHIP 2200PFKB 50V TAPE	0	0	CJ40	0800294R	CAP.-ELECTRO. 10UF-M(SMG) 50V	0	0
CC25	0893179R	CAP.CHIP-CERAMIC 100000PF 16V TAPE	0	0	CJ41	0893232R	CAP 1608CHIP 100000PFZF25V TAPE	0	0
CC30	0800326R	CAP.-ELECTRO. 100UF-M 16V	0	0	CJ42	0893232R	CAP 1608CHIP 100000PFZF25V TAPE	0	0
CC31	0800326R	CAP.-ELECTRO. 100UF-M 16V	0	0	CJ43	0893232R	CAP 1608CHIP 100000PFZF25V TAPE	0	0
CC32	0893179R	CAP.CHIP-CERAMIC 100000PF 16V TAPE	0	0	CJ44	0893232R	CAP 1608CHIP 100000PFZF25V TAPE	0	0
CC33	0893179R	CAP.CHIP-CERAMIC 100000PF 16V TAPE	0	0	CJ45	0800326R	CAP.-ELECTRO. 100UF-M 16V	0	0
CC34	0893179R	CAP.CHIP-CERAMIC 100000PF 16V TAPE	0	0	CJ46	0893232R	CAP 1608CHIP 100000PFZF25V TAPE	0	0
CC35	0893115R	CAP 1608CHIP 15PFJCH 50V TAPE	0	0	CJ47	0800318R	CAP.-ELECTRO. 47UF-M 25V	0	0
CE01	0800326R	CAP.-ELECTRO. 100UF-M 16V	0	0	CJ48	AA01101R	CERAMIC CAPACITOR(1UF 10V-F)	0	0
CE02	0893179R	CAP.CHIP-CERAMIC 100000PF 16V TAPE	0	0	CM02	0880044R	CAP.-POLYESTER 0.01UF-KEB 50V	0	0
CE03	0893115R	CAP 1608CHIP 15PFJCH 50V TAPE	0	0	CM04	0880039R	CAP.-POLYESTER 0.0047UF-KEB50V	0	0
CE04	0893118R	CAP 1608CHIP 27PFJCH 50V TAPE	0	0	CM06	0880194R	CAP.-POLYESTER 0.1UF-J 50V	0	0

PRODUCT SERVICE NOTE: Components marked with a ⚠ have special characteristics important to safety. Before replacing any of these components, read carefully, the PRODUCT SAFETY NOTICE of this Service Manual. Don't degrade the safety of the receiver through improper servicing.

SYMBOL NO.	PART NO.	PART DESCRIPTION	50"	60"	SYMBOL NO.	PART NO.	PART DESCRIPTION	50"	60"
CM09	0880044R	CAP.-POLYESTER 0.01UF-KEB 50V	0	0	CV66	0893239R	CAP 1608CHIP 10000PFZF 50V TAPE	0	0
CM10	0800294R	CAP.-ELECTRO. 10UF-M(SMG) 50V	0	0	CV67	0893239R	CAP 1608CHIP 10000PFZF 50V TAPE	0	0
CM11	0800294R	CAP.-ELECTRO. 10UF-M(SMG) 50V	0	0	CV68	0893239R	CAP 1608CHIP 10000PFZF 50V TAPE	0	0
CM12	0800318R	CAP.-ELECTRO. 47UF-M 25V	0	0	CV69	0800326R	CAP.-ELECTRO. 100UF-M 16V	0	0
CM14	0880194R	CAP.-POLYESTER 0.1UF-J 50V	0	0	CV70	0893239R	CAP 1608CHIP 10000PFZF 50V TAPE	0	0
CM17	0800325R	CAP.-ELECTRO. 100UF-M 10V	0	0	CV71	0893239R	CAP 1608CHIP 10000PFZF 50V TAPE	0	0
CM18	0880044R	CAP.-POLYESTER 0.01UF-KEB 50V	0	0	CV72	0893239R	CAP 1608CHIP 10000PFZF 50V TAPE	0	0
CM19	0800325R	CAP.-ELECTRO. 100UF-M 10V	0	0	CV73	0893232R	CAP 1608CHIP 100000PFZF25V TAPE	0	0
CM20	0880039R	CAP.-POLYESTER 0.0047UF-KEB50V	0	0	CV74	0800352R	CAP.-ELECTRO.470UF 10V	0	0
CM25	0880044R	CAP.-POLYESTER 0.01UF-KEB 50V	0	0	CV75	0893129R	CAP 1608CHIP 180PFJCH 50V TAPE	0	0
CM26	0800325R	CAP.-ELECTRO. 100UF-M 10V	0	0	CV76	0893239R	CAP 1608CHIP 10000PFZF 50V TAPE	0	0
CM27	0890078R	CAP.-CERAMIC 220PF-K 50V	0	0	CV77	0893127R	CAP 1608CHIP 120PFJCH 50V TAPE	0	0
CM28	0880194R	CAP.-POLYESTER 0.1UF-J 50V	0	0	CV78	0800294R	CAP.-ELECTRO. 10UF-M(SMG) 50V	0	0
CM29	0890074R	CAP.-CERAMIC 100PF-J 50V	0	0	CV80	0893232R	CAP 1608CHIP 100000PFZF25V TAPE	0	0
CM30	0800294R	CAP.-ELECTRO. 10UF-M(SMG) 50V	0	0	CV81	0800326R	CAP.-ELECTRO. 100UF-M 16V	0	0
CM31	0800279R	CAP.-ELECTORO. 1.0UF-M(SMG) 50V	0	0	CV83	0893239R	CAP 1608CHIP 10000PFZF 50V TAPE	0	0
CM32	0800326R	CAP.-ELECTRO. 100UF-M 16V	0	0	CV85	0893232R	CAP 1608CHIP 100000PFZF25V TAPE	0	0
CV01	AA01111R	CERAMIC CAPACITOR(1.0UF 6.3V)	0	0	CV86	AA00931R	CAP. CERAMIC 2012 (1UF 10V)	0	0
CV02	0893232R	CAP 1608CHIP 100000PFZF25V TAPE	0	0	CV88	AA00931R	CAP. CERAMIC 2012 (1UF 10V)	0	0
CV03	AA01101R	CERAMIC CAPACITOR(1UF 10V-F)	0	0	CV90	AA00931R	CAP. CERAMIC 2012 (1UF 10V)	0	0
CV04	AA01101R	CERAMIC CAPACITOR(1UF 10V-F)	0	0	CV92	AA00931R	CAP. CERAMIC 2012 (1UF 10V)	0	0
CV05	0893232R	CAP 1608CHIP 100000PFZF25V TAPE	0	0	CV94	AA00931R	CAP. CERAMIC 2012 (1UF 10V)	0	0
CV06	AA01101R	CERAMIC CAPACITOR(1UF 10V-F)	0	0	CV96	AA00931R	CAP. CERAMIC 2012 (1UF 10V)	0	0
CV07	AA01101R	CERAMIC CAPACITOR(1UF 10V-F)	0	0	CV98	0800326R	CAP.-ELECTRO. 100UF-M 16V	0	0
CV08	AA01101R	CERAMIC CAPACITOR(1UF 10V-F)	0	0	CV99	0893232R	CAP 1608CHIP 100000PFZF25V TAPE	0	0
CV09	AA01101R	CERAMIC CAPACITOR(1UF 10V-F)	0	0	CW15	0800326R	CAP.-ELECTRO. 100UF-M 16V	0	0
CV10	AA01111R	CERAMIC CAPACITOR(1.0UF 6.3V)	0	0	CW16	AA01101R	CERAMIC CAPACITOR(1UF 10V-F)	0	0
CV11	0800326R	CAP.-ELECTRO. 100UF-M 16V	0	0	CW17	AA01101R	CERAMIC CAPACITOR(1UF 10V-F)	0	0
CV12	AA01111R	CERAMIC CAPACITOR(1.0UF 6.3V)	0	0	CW18	AA01111R	CERAMIC CAPACITOR(1.0UF 6.3V)	0	0
CV13	AA01111R	CERAMIC CAPACITOR(1.0UF 6.3V)	0	0	CW19	AA01111R	CERAMIC CAPACITOR(1.0UF 6.3V)	0	0
CV14	AA01101R	CERAMIC CAPACITOR(1UF 10V-F)	0	0	CW20	AA01111R	CERAMIC CAPACITOR(1.0UF 6.3V)	0	0
CV15	AA01101R	CERAMIC CAPACITOR(1UF 10V-F)	0	0	CW21	AA01111R	CERAMIC CAPACITOR(1.0UF 6.3V)	0	0
CV16	AA01101R	CERAMIC CAPACITOR(1UF 10V-F)	0	0	CW22	AA01111R	CERAMIC CAPACITOR(1.0UF 6.3V)	0	0
CV17	AA01111R	CERAMIC CAPACITOR(1.0UF 6.3V)	0	0	CW23	AA01111R	CERAMIC CAPACITOR(1.0UF 6.3V)	0	0
CV18	AA01111R	CERAMIC CAPACITOR(1.0UF 6.3V)	0	0	CW27	0893232R	CAP 1608CHIP 100000PFZF25V TAPE	0	0
CV19	AA01101R	CERAMIC CAPACITOR(1UF 10V-F)	0	0	CW30	0800326R	CAP.-ELECTRO. 100UF-M 16V	0	0
CV20	AA01101R	CERAMIC CAPACITOR(1UF 10V-F)	0	0	CW31	0893232R	CAP 1608CHIP 100000PFZF25V TAPE	0	0
CV21	AA01111R	CERAMIC CAPACITOR(1.0UF 6.3V)	0	0	CW32	0893232R	CAP 1608CHIP 100000PFZF25V TAPE	0	0
CV22	0893232R	CAP 1608CHIP 100000PFZF25V TAPE	0	0	CW33	0893232R	CAP 1608CHIP 100000PFZF25V TAPE	0	0
CV23	AA01111R	CERAMIC CAPACITOR(1.0UF 6.3V)	0	0	CW34	AA01111R	CERAMIC CAPACITOR(1.0UF 6.3V)	0	0
CV24	AA01101R	CERAMIC CAPACITOR(1UF 10V-F)	0	0	CW35	AA01111R	CERAMIC CAPACITOR(1.0UF 6.3V)	0	0
CV25	AA01101R	CERAMIC CAPACITOR(1UF 10V-F)	0	0	CW36	AA01111R	CERAMIC CAPACITOR(1.0UF 6.3V)	0	0
CV26	AA01111R	CERAMIC CAPACITOR(1.0UF 6.3V)	0	0	CW37	0893232R	CAP 1608CHIP 100000PFZF25V TAPE	0	0
CV27	0893232R	CAP 1608CHIP 100000PFZF25V TAPE	0	0	CW38	0800326R	CAP.-ELECTRO. 100UF-M 16V	0	0
CV28	0800294R	CAP.-ELECTRO. 10UF-M(SMG) 50V	0	0	CW39	0893232R	CAP 1608CHIP 100000PFZF25V TAPE	0	0
CV29	0800294R	CAP.-ELECTRO. 10UF-M(SMG) 50V	0	0	CW40	0893232R	CAP 1608CHIP 100000PFZF25V TAPE	0	0
CV30	0800294R	CAP.-ELECTRO. 10UF-M(SMG) 50V	0	0	CW41	0800326R	CAP.-ELECTRO. 100UF-M 16V	0	0
CV31	0800294R	CAP.-ELECTRO. 10UF-M(SMG) 50V	0	0	CW57	0800326R	CAP.-ELECTRO. 100UF-M 16V	0	0
CV36	0893232R	CAP 1608CHIP 100000PFZF25V TAPE	0	0	CXA0	AA01101R	CERAMIC CAPACITOR(1UF 10V-F)	0	0
CV37	AA01111R	CERAMIC CAPACITOR(1.0UF 6.3V)	0	0	CY01	0800294R	CAP.-ELECTRO. 10UF-M(SMG) 50V	0	0
CV38	0893232R	CAP 1608CHIP 100000PFZF25V TAPE	0	0	CY02	AA01101R	CERAMIC CAPACITOR(1UF 10V-F)	0	0
CV39	AA01111R	CERAMIC CAPACITOR(1.0UF 6.3V)	0	0	CY03	0893114R	CAP 1608CHIP 12PFJCH 50V TAPE	0	0
CV40	0800326R	CAP.-ELECTRO. 100UF-M 16V	0	0	CY04	0893121R	CAP 1608CHIP 39PFJCH 50V TAPE	0	0
CV41	0893232R	CAP 1608CHIP 100000PFZF25V TAPE	0	0	CY05	0893114R	CAP 1608CHIP 12PFJCH 50V TAPE	0	0
CV42	0800352R	CAP.-ELECTRO.470UF 10V	0	0	CY06	0800282R	CAP.-ELECTORO. 2.2UF-M(SMG) 50V	0	0
CV43	0800352R	CAP.-ELECTRO.470UF 10V	0	0	CY07	0800282R	CAP.-ELECTORO. 2.2UF-M(SMG) 50V	0	0
CV44	0893239R	CAP 1608CHIP 10000PFZF 50V TAPE	0	0	CY08	AA01111R	CERAMIC CAPACITOR(1.0UF 6.3V)	0	0
CV45	0800294R	CAP.-ELECTRO. 10UF-M(SMG) 50V	0	0	CY09	AA01111R	CERAMIC CAPACITOR(1.0UF 6.3V)	0	0
CV46	0893232R	CAP 1608CHIP 100000PFZF25V TAPE	0	0	CY10	0893135R	CAP 1608CHIP 470PFJCH 50V TAPE	0	0
CV47	AA01111R	CERAMIC CAPACITOR(1.0UF 6.3V)	0	0	CY11	0893239R	CAP 1608CHIP 10000PFZF 50V TAPE	0	0
CV48	0893232R	CAP 1608CHIP 100000PFZF25V TAPE	0	0	CY12	AA01101R	CERAMIC CAPACITOR(1UF 10V-F)	0	0
CV49	0800326R	CAP.-ELECTRO. 100UF-M 16V	0	0	CY13	0893239R	CAP 1608CHIP 10000PFZF 50V TAPE	0	0
CV53	0893232R	CAP 1608CHIP 100000PFZF25V TAPE	0	0	CY14	0800326R	CAP.-ELECTRO. 100UF-M 16V	0	0
CV54	AA01101R	CERAMIC CAPACITOR(1UF 10V-F)	0	0	CY15	AA01101R	CERAMIC CAPACITOR(1UF 10V-F)	0	0
CV55	AA01111R	CERAMIC CAPACITOR(1.0UF 6.3V)	0	0	CY16	0893179R	CAP.CHIP-CERAMIC 100000PF 16V TAPE	0	0
CV56	AA01101R	CERAMIC CAPACITOR(1UF 10V-F)	0	0	CY17	0893179R	CAP.CHIP-CERAMIC 100000PF 16V TAPE	0	0
CV57	AA01111R	CERAMIC CAPACITOR(1.0UF 6.3V)	0	0	CY18	0893179R	CAP.CHIP-CERAMIC 100000PF 16V TAPE	0	0
CV58	0800326R	CAP.-ELECTRO. 100UF-M 16V	0	0	CY19	0893179R	CAP.CHIP-CERAMIC 100000PF 16V TAPE	0	0
CV59	0893232R	CAP 1608CHIP 100000PFZF25V TAPE	0	0	CY20	0800294R	CAP.-ELECTRO. 10UF-M(SMG) 50V	0	0
CV60	0800294R	CAP.-ELECTRO. 10UF-M(SMG) 50V	0	0	CY21	0893179R	CAP.CHIP-CERAMIC 100000PF 16V TAPE	0	0
CV61	0893118R	CAP 1608CHIP 27PFJCH 50V TAPE	0	0	CY22	0893179R	CAP.CHIP-CERAMIC 100000PF 16V TAPE	0	0
CV62	0893115R	CAP 1608CHIP 15PFJCH 50V TAPE	0	0	CY23	0893179R	CAP.CHIP-CERAMIC 100000PF 16V TAPE	0	0
CV63	0893111R	CAP 1608CHIP 8PFCCH 50V TAPE	0	0	CY24	0893179R	CAP.CHIP-CERAMIC 100000PF 16V TAPE	0	0
CV64	AA01121R	CERAMIC CAPACITOR(0.47UF 10V)	0	0	CY25	0893232R	CAP 1608CHIP 100000PFZF25V TAPE	0	0
CV65	0893232R	CAP 1608CHIP 100000PFZF25V TAPE	0	0	CY26	0800326R	CAP.-ELECTRO. 100UF-M 16V	0	0

PRODUCT SERVICE NOTE: Components marked with a ⚠ have special characteristics important to safety. Before replacing any of these components, read carefully, the PRODUCT SAFETY NOTICE of this Service Manual. Don't degrade the safety of the receiver through improper servicing.

SYMBOL NO.	PART NO.	PART DESCRIPTION	50"	60"	SYMBOL NO.	PART NO.	PART DESCRIPTION	50"	60"
CY27	0893232R	CAP 1608CHIP 100000PFZF25V TAPE	0	0	D004	2344041M	DIODE 1SS254TA/1SS270TA	0	0
CY28	0800352R	CAP.-ELECTRO.470UF 10V	0	0	D010	2331849M	ZENER HZ12C3 (TA) SI 500MW	0	0
CY29	0893232R	CAP 1608CHIP 100000PFZF25V TAPE	0	0	D011	2331849M	ZENER HZ12C3 (TA) SI 500MW	0	0
CY30	0800352R	CAP.-ELECTRO.470UF 10V	0	0	D012	2331849M	ZENER HZ12C3 (TA) SI 500MW	0	0
CY31	0893117R	CAP 1608CHIP 22PFJCH 50V TAPE	0	0	D013	2331849M	ZENER HZ12C3 (TA) SI 500MW	0	0
CY32	0893117R	CAP 1608CHIP 22PFJCH 50V TAPE	0	0	D014	2331849M	ZENER HZ12C3 (TA) SI 500MW	0	0
CY35	AA01101R	CERAMIC CAPACITOR(1UF 10V-F)	0	0	D015	2331849M	ZENER HZ12C3 (TA) SI 500MW	0	0
CY36	0800282R	CAP.-ELECTORO. 2.2UF-M(SMG) 50V	0	0	D016	2331849M	ZENER HZ12C3 (TA) SI 500MW	0	0
CY37	0893232R	CAP 1608CHIP 100000PFZF25V TAPE	0	0	D017	2331849M	ZENER HZ12C3 (TA) SI 500MW	0	0
CY38	0800294R	CAP.-ELECTRO. 10UF-M(SMG) 50V	0	0	D018	2331849M	ZENER HZ12C3 (TA) SI 500MW	0	0
CY39	0893179R	CAP.CHIP-CERAMIC 100000PF 16V TAPE	0	0	D019	2331849M	ZENER HZ12C3 (TA) SI 500MW	0	0
CY40	0893134R	CAP 1608CHIP 390PFJCH 50V TAPE	0	0	D020	2331849M	ZENER HZ12C3 (TA) SI 500MW	0	0
CY41	0893179R	CAP.CHIP-CERAMIC 100000PF 16V TAPE	0	0	D022	2344041M	DIODE 1SS254TA/1SS270TA	0	0
CY42	0893239R	CAP 1608CHIP 10000PFZF 50V TAPE	0	0	D023	2344041M	DIODE 1SS254TA/1SS270TA	0	0
CY43	0800294R	CAP.-ELECTRO. 10UF-M(SMG) 50V	0	0	D026	2331809M	ZENER DIODE HZ-6 TAPE (C3) SI 500MW	0	0
CY45	0800326R	CAP.-ELECTRO. 100UF-M 16V	0	0	D027	2339971M	ZENER HZS33-1 TA	0	0
CY47	0893179R	CAP.CHIP-CERAMIC 100000PF 16V TAPE	0	0	D028	2339971M	ZENER HZS33-1 TA	0	0
CY48	0893239R	CAP 1608CHIP 10000PFZF 50V TAPE	0	0	D029	2331849M	ZENER HZ12C3 (TA) SI 500MW	0	0
CY50	0800326R	CAP.-ELECTRO. 100UF-M 16V	0	0	D030	2331849M	ZENER HZ12C3 (TA) SI 500MW	0	0
CY51	0893232R	CAP 1608CHIP 100000PFZF25V TAPE	0	0	D031	2331849M	ZENER HZ12C3 (TA) SI 500MW	0	0
CY52	0893121R	CAP 1608CHIP 39PFJCH 50V TAPE	0	0	D032	2331849M	ZENER HZ12C3 (TA) SI 500MW	0	0
CY53	0893239R	CAP 1608CHIP 10000PFZF 50V TAPE	0	0	D033	2331849M	ZENER HZ12C3 (TA) SI 500MW	0	0
CY54	0893239R	CAP 1608CHIP 10000PFZF 50V TAPE	0	0	D034	2331849M	ZENER HZ12C3 (TA) SI 500MW	0	0
CY55	0893232R	CAP 1608CHIP 100000PFZF25V TAPE	0	0	D036	2331849M	ZENER HZ12C3 (TA) SI 500MW	0	0
CY56	AL01842R	1000UF 10V ALUMINIUM ELECTROLYTIC CAPACITOR	0	0	D038	2331849M	ZENER HZ12C3 (TA) SI 500MW	0	0
CY57	0893232R	CAP 1608CHIP 100000PFZF25V TAPE	0	0	D040	2331849M	ZENER HZ12C3 (TA) SI 500MW	0	0
CY58	0893179R	CAP.CHIP-CERAMIC 100000PF 16V TAPE	0	0	D041	2344041M	DIODE 1SS254TA/1SS270TA	0	0
CY59	0893179R	CAP.CHIP-CERAMIC 100000PF 16V TAPE	0	0	D042	2331849M	ZENER HZ12C3 (TA) SI 500MW	0	0
CY60	0893179R	CAP.CHIP-CERAMIC 100000PF 16V TAPE	0	0	D043	2331849M	ZENER HZ12C3 (TA) SI 500MW	0	0
CY61	AA01111R	CERAMIC CAPACITOR(1.0UF 6.3V)	0	0	D044	2344041M	DIODE 1SS254TA/1SS270TA	0	0
CY62	0893222R	CAP 1608CHIP10000PFKB 50V TAPE	0	0	D045	2344041M	DIODE 1SS254TA/1SS270TA	0	0
CY63	0893126R	CAP 1608CHIP 100PFJCH 50V TAPE	0	0	D401	CH02001M	DIODE 1SR139-400	0	0
CY64	0893126R	CAP 1608CHIP 100PFJCH 50V TAPE	0	0	D402	CH02001M	DIODE 1SR139-400	0	0
CY65	0893179R	CAP.CHIP-CERAMIC 100000PF 16V TAPE	0	0	D404	CH02001M	DIODE 1SR139-400	0	0
CY66	0893179R	CAP.CHIP-CERAMIC 100000PF 16V TAPE	0	0	D405	CH02001M	DIODE 1SR139-400	0	0
CY67	0800282R	CAP.-ELECTORO. 2.2UF-M(SMG) 50V	0	0	D406	CH02001M	DIODE 1SR139-400	0	0
CY68	0893213R	CAP1608CHIP 2200PFKB 50V TAPE	0	0	D458	2344041M	DIODE 1SS254TA/1SS270TA	0	0
CY69	0893114R	CAP 1608CHIP 12PFJCH 50V TAPE	0	0	D459	2344041M	DIODE 1SS254TA/1SS270TA	0	0
CY70	0800351R	CAP.-ELECTRO. 470UF-M 6.3V	0	0	D505	2344041M	DIODE 1SS254TA/1SS270TA	0	0
CY71	AA01101R	CERAMIC CAPACITOR(1UF 10V-F)	0	0	D506	2344041M	DIODE 1SS254TA/1SS270TA	0	0
CY72	0893179R	CAP.CHIP-CERAMIC 100000PF 16V TAPE	0	0	D507	2344041M	DIODE 1SS254TA/1SS270TA	0	0
CY73	0893179R	CAP.CHIP-CERAMIC 100000PF 16V TAPE	0	0	D510	2344041M	DIODE 1SS254TA/1SS270TA	0	0
CY74	0893179R	CAP.CHIP-CERAMIC 100000PF 16V TAPE	0	0	D517	2344041M	DIODE 1SS254TA/1SS270TA	0	0
CY75	0800326R	CAP.-ELECTRO. 100UF-M 16V	0	0	D609	CC00003R	DIODE.CHIP 1SS355	0	0
CY76	0893232R	CAP 1608CHIP 100000PFZF25V TAPE	0	0	D613	CC00003R	DIODE.CHIP 1SS355	0	0
CY77	AL01842R	1000UF 10V ALUMINIUM ELECTROLYTIC CAPACITOR	0	0	D801	CC00003R	DIODE.CHIP 1SS355	0	
CY78	0893232R	CAP 1608CHIP 100000PFZF25V TAPE	0	0	D802	CC00003R	DIODE.CHIP 1SS355	0	
CY79	0893179R	CAP.CHIP-CERAMIC 100000PF 16V TAPE	0	0	D803	CC00003R	DIODE.CHIP 1SS355	0	
CY80	0893179R	CAP.CHIP-CERAMIC 100000PF 16V TAPE	0	0	D804	CC00003R	DIODE.CHIP 1SS355		0
CY81	0893179R	CAP.CHIP-CERAMIC 100000PF 16V TAPE	0	0	D805	CC00003R	DIODE.CHIP 1SS355		0
CY82	AA01111R	CERAMIC CAPACITOR(1.0UF 6.3V)	0	0	D901	CH02001M	DIODE 1SR139-400	0	0
CY83	0893222R	CAP 1608CHIP10000PFKB 50V TAPE	0	0	D902	CH00051	DIODE SD-S1WB(A)60B (600V)	0	0
CY84	0893126R	CAP 1608CHIP 100PFJCH 50V TAPE	0	0	D904	2342061	DIODE D3SB(A)60.	0	0
CY85	0893126R	CAP 1608CHIP 100PFJCH 50V TAPE	0	0	D908	CH02011M	DIODE 1SR153-400	0	0
CY86	0893179R	CAP.CHIP-CERAMIC 100000PF 16V TAPE	0	0	D909	CH02011M	DIODE 1SR153-400	0	0
CY87	0893179R	CAP.CHIP-CERAMIC 100000PF 16V TAPE	0	0	D910	CH02011M	DIODE 1SR153-400	0	0
CY88	0800282R	CAP.-ELECTORO. 2.2UF-M(SMG) 50V	0	0	D911	CH02671R	LED SR3517F6T (RED)	0	0
CY89	0893213R	CAP1608CHIP 2200PFKB 50V TAPE	0	0	⚠ D913	CH02673R	LED SM3517F6T (GREEN)	0	0
CY90	0893114R	CAP 1608CHIP 12PFJCH 50V TAPE	0	0	D916	2337341M	DIODE 1SS270A (TP)	0	0
CY91	0800358R	CAP.-ELECTRO. 1000UF-M 6.3V	0	0	D918	2344041M	DIODE 1SS254TA/1SS270TA	0	0
CY92	AA01101R	CERAMIC CAPACITOR(1UF 10V-F)	0	0	D921	2344041M	DIODE 1SS254TA/1SS270TA	0	0
CY93	0893179R	CAP.CHIP-CERAMIC 100000PF 16V TAPE	0	0	D922	CH02751	FMN-G12S	0	0
CY94	0893179R	CAP.CHIP-CERAMIC 100000PF 16V TAPE	0	0	D923	CH01091M	DIODE EL1 (350V)	0	0
CY95	0893179R	CAP.CHIP-CERAMIC 100000PF 16V TAPE	0	0	D924	2337951S	DIODE RU4Z(LF015-302)	0	0
CY96	0800326R	CAP.-ELECTRO. 100UF-M 16V	0	0	D925	CH02751	FMN-G12S		0
CY97	0893232R	CAP 1608CHIP 100000PFZF25V TAPE	0	0	D925	CH02751	FMN-G12S	0	
CYA0	0893179R	CAP.CHIP-CERAMIC 100000PF 16V TAPE	0	0	D926	CH01042G	DIODE RK34 LF-A4	0	0
CYA1	0893179R	CAP.CHIP-CERAMIC 100000PF 16V TAPE	0	0	D927	2334832M	DIODE EK04V1	0	0
CYA2	0893179R	CAP.CHIP-CERAMIC 100000PF 16V TAPE	0	0	D928	CH02673R	LED SM3517F6T (GREEN)	0	0
CYA3	0893179R	CAP.CHIP-CERAMIC 100000PF 16V TAPE	0	0	D930	CH02673R	LED SM3517F6T (GREEN)	0	0
CYA4	0893179R	CAP.CHIP-CERAMIC 100000PF 16V TAPE	0	0	D931	CH02673R	LED SM3517F6T (GREEN)	0	
					D932	CH02673R	LED SM3517F6T (GREEN)	0	0
		DIODES			D933	CH02673R	LED SM3517F6T (GREEN)	0	0
D002	2344041M	DIODE 1SS254TA/1SS270TA	0	0	D934	2344041M	DIODE 1SS254TA/1SS270TA	0	0
D003	2344041M	DIODE 1SS254TA/1SS270TA	0	0	D935	2344041M	DIODE 1SS254TA/1SS270TA	0	0

PRODUCT SERVICE NOTE: Components marked with a ⚠ have special characteristics important to safety. Before replacing any of these components, read carefully, the PRODUCT SAFETY NOTICE of this Service Manual. Don't degrade the safety of the receiver through improper servicing.

SYMBOL NO.	PART NO.	PART DESCRIPTION	50"	60"
D936	2344041M	DIODE 1SS254TA/1SS270TA	0	0
D937	2344041M	DIODE 1SS254TA/1SS270TA	0	0
D938	2344041M	DIODE 1SS254TA/1SS270TA	0	0
D941	2344041M	DIODE 1SS254TA/1SS270TA	0	
D943	2344041M	DIODE 1SS254TA/1SS270TA	0	0
D944	2344041M	DIODE 1SS254TA/1SS270TA	0	0
D945	2344041M	DIODE 1SS254TA/1SS270TA	0	0
D948	2344041M	DIODE 1SS254TA/1SS270TA	0	0
D949	2344041M	DIODE 1SS254TA/1SS270TA	0	0
D951	2344041M	DIODE 1SS254TA/1SS270TA	0	0
D952	2344041M	DIODE 1SS254TA/1SS270TA	0	0
D953	2344041M	DIODE 1SS254TA/1SS270TA	0	0
D954	2344041M	DIODE 1SS254TA/1SS270TA	0	0
D956	2344041M	DIODE 1SS254TA/1SS270TA	0	0
D957	CH02751	FMN-G12S	0	0
D960	2334324M	ZENER DIODE RD36E TAPE (B3) SI 500MW 36V	0	0
D961	2331844M	ZENER HZ12-B1	0	0
D962	2331844M	ZENER HZ12-B1	0	0
D963	2339022M	ZENER DIODE HZS6B2L TAPE	0	0
D964	2339847M	ZENER HZS6C1 TA	0	0
D968	2339857M	ZENER HZS7C1 SI	0	0
D969	2339857M	ZENER HZS7C1 SI	0	0
D971	2339816M	ZENER HZS3B3 TAPE	0	0
D972	2339887M	ZENER HZS12C1 TA	0	0
D9A8	2339836M	ZENER HZS-5 B3	0	0
D9A9	2339822M	ZENER HZS4A2 TA	0	0
DA01	2331849M	ZENER HZ12C3 (TA) SI 500MW	0	0
DA02	2331849M	ZENER HZ12C3 (TA) SI 500MW	0	0
DA03	2344041M	DIODE 1SS254TA/1SS270TA	0	0
DA04	2344041M	DIODE 1SS254TA/1SS270TA	0	0
DA05	2344041M	DIODE 1SS254TA/1SS270TA	0	0
DA06	2344041M	DIODE 1SS254TA/1SS270TA	0	0
DA07	2344041M	DIODE 1SS254TA/1SS270TA	0	0
DA08	2344041M	DIODE 1SS254TA/1SS270TA	0	0
DA09	2344041M	DIODE 1SS254TA/1SS270TA	0	0
DA10	2344041M	DIODE 1SS254TA/1SS270TA	0	0
DA11	2344041M	DIODE 1SS254TA/1SS270TA	0	0
DA12	2344041M	DIODE 1SS254TA/1SS270TA	0	0
DA51	2331771M	ZENER HZ-3A1 TAPE	0	0
DA52	2331771M	ZENER HZ-3A1 TAPE	0	0
DA53	2344041M	DIODE 1SS254TA/1SS270TA	0	0
DA54	2344041M	DIODE 1SS254TA/1SS270TA	0	0
DAA1	2344041M	DIODE 1SS254TA/1SS270TA	0	0
DAA2	2344041M	DIODE 1SS254TA/1SS270TA	0	0
DAA3	2337341M	DIODE 1SS270A (TP)	0	0
DAA4	2337341M	DIODE 1SS270A (TP)	0	0
DAA5	2337341M	DIODE 1SS270A (TP)	0	0
DAA6	2337341M	DIODE 1SS270A (TP)	0	0
DAM1	2344041M	DIODE 1SS254TA/1SS270TA	0	0
DAM2	2344041M	DIODE 1SS254TA/1SS270TA	0	0
DAM3	2337341M	DIODE 1SS270A (TP)	0	0
DAM4	2337341M	DIODE 1SS270A (TP)	0	0
DAM5	2337341M	DIODE 1SS270A (TP)	0	0
DAM6	2337341M	DIODE 1SS270A (TP)	0	0
DJ01	CC10721R	DIODE CHIP DA204K-TPTX	0	0
DJ02	CC10721R	DIODE CHIP DA204K-TPTX	0	0
DJ03	CC10721R	DIODE CHIP DA204K-TPTX	0	0
DJ04	CC10721R	DIODE CHIP DA204K-TPTX	0	0
DJ05	CC10721R	DIODE CHIP DA204K-TPTX	0	0
DJ06	CC10721R	DIODE CHIP DA204K-TPTX	0	0
DJ07	CC10721R	DIODE CHIP DA204K-TPTX	0	0
DJ08	CC10721R	DIODE CHIP DA204K-TPTX	0	0
DJ09	2344041M	DIODE 1SS254TA/1SS270TA	0	0
DJ10	2344041M	DIODE 1SS254TA/1SS270TA	0	0
DJ11	CC00003R	DIODE.CHIP 1SS355	0	0
DJ12	CC00003R	DIODE.CHIP 1SS355	0	0
DJ13	2331849M	ZENER HZ12C3 (TA) SI 500MW	0	0
DJ14	2331849M	ZENER HZ12C3 (TA) SI 500MW	0	0
DJ15	2331849M	ZENER HZ12C3 (TA) SI 500MW	0	0
DJ16	2331849M	ZENER HZ12C3 (TA) SI 500MW	0	0
DM03	CH02711	SLR343 BBT3F (LED BLUE)		0
DM03	CH02711	SLR343 BBT3F (LED BLUE)	0	
DM04	2331849M	ZENER HZ12C3 (TA) SI 500MW	0	0
DM07	2331849M	ZENER HZ12C3 (TA) SI 500MW	0	0
DM08	2331849M	ZENER HZ12C3 (TA) SI 500MW	0	0
DM09	2331849M	ZENER HZ12C3 (TA) SI 500MW	0	0

SYMBOL NO.	PART NO.	PART DESCRIPTION	50"	60"
DM10	2331849M	ZENER HZ12C3 (TA) SI 500MW	0	0
DM11	2331849M	ZENER HZ12C3 (TA) SI 500MW	0	0
DM12	2331815M	ZENER HZ7-B2	0	0
DM13	2331849M	ZENER HZ12C3 (TA) SI 500MW	0	0
DM14	2344041M	DIODE 1SS254TA/1SS270TA	0	0
DM15	CH02721	PHOTO DIODE PNZ313B	0	0
DM16	2331849M	ZENER HZ12C3 (TA) SI 500MW	0	0
DM17	CH02673	LED SM35176 (GREEN)	0	0
DM18	CH02671	LED SR3517F6 (RED)	0	0
DM19	CH02671	LED SR3517F6 (RED)	0	0
DM20	2331849M	ZENER HZ12C3 (TA) SI 500MW	0	0
DV02	2331771M	ZENER HZ-3A1 TAPE	0	0
DV03	2331771M	ZENER HZ-3A1 TAPE	0	0
DV05	2331849M	ZENER HZ12C3 (TA) SI 500MW	0	0
DV07	2331849M	ZENER HZ12C3 (TA) SI 500MW	0	0
DV09	2331849M	ZENER HZ12C3 (TA) SI 500MW	0	0
DV10	2331849M	ZENER HZ12C3 (TA) SI 500MW	0	0
DV11	2331849M	ZENER HZ12C3 (TA) SI 500MW	0	0
DV15	2331849M	ZENER HZ12C3 (TA) SI 500MW	0	0
DY01	2344041M	DIODE 1SS254TA/1SS270TA	0	0
DY02	2344041M	DIODE 1SS254TA/1SS270TA	0	0
		FUSES, PROTECTORS		
⚠ E901	AZ00421M	PROTECTOR 491010T52	0	0
⚠ E903	AZ00109M	PROTECTOR CRXT491007	0	0
⚠ E904	AZ00109M	PROTECTOR CRXT491007	0	0
⚠ E905	AZ00109M	PROTECTOR CRXT491007	0	0
⚠ EAG1	AZ00102M	PROTECTOR(CRXT491001)	0	0
⚠ EAG2	AZ00102M	PROTECTOR(CRXT491001)	0	0
⚠ F901	FN00374	FUSE 51MS 060 L 125V 6A	0	0
⚠ F904	FN00372	FUSE 51MS 040 L 125V 4A	0	0
		COMPOUND COMPONENTS		
EANT	HP00772	ANTENNA SWITCH BOX	0	0
HM01	CZ01171	IC GP1UM281RK	0	0
HM02	CZ01161	IC GP1UM281QK	0	0
U301	HC00512	FRONT-END ENGE6106DS	0	0
U302	HC00464	FE-ENG36626G	0	0
⚠ U901	CW00352	UPM0518SA	0	0
UBM1	CS00761	HCM001 ASY(BRIDGE MEDIA)	0	0
		INTEGRATED CIRCUITS		
I001	CK39571U	IC M306V7MH-XXXFP TV MICON	0	0
I002	CK37051R	ANALOG MONOLITHIC IC(BD4729G)	0	0
I003	CK35894R	IC CAT24WC32J1	0	0
I004	CK01872R	IC BU4053BCFV-E2	0	0
I005	CK31071R	IC CXA1875AM	0	0
I006	CK37412U	IR BLASTER MASK S3C80F9XKN-QZR7	0	0
I007	CK35893R	IC CAT24WC16J1	0	0
I008	CK01872R	IC BU4053BCFV-E2	0	0
I009	CK37216R	MONO IC TK11133CSCL	0	0
I010	CK38491R	IC MM74HCT245MTCX	0	0
I011	CK01172R	HD74HC221FPEL	0	0
I012	CK39301R	IC MM1096AF	0	0
I301	CK01872R	IC BU4053BCFV-E2	0	0
I402	CK37406R	MONO IC SI-3012KS	0	0
I403	CP06541F	IC REG.(SI-3033C)		0
I403	CP06541F	IC REG.(SI-3033C)	0	
I404	CK37212R	MONO IC TK11125CSCL	0	0
I405	CK37216R	MONO IC TK11133CSCL	0	0
I453	CK37406R	MONO IC SI-3012KS	0	0
I504	CP05163F	IC SI-3090F	0	0
I601	CK38991U	MICRO COMPUTER(M30624FGPFP)		0
I601	CK39601U	TV MICON	0	
I602	CK36501R	IC M241280WMN67	0	0
I603	CK37051R	ANALOG MONOLITHIC IC(BD4729G)	0	0
I604	CK01872R	IC BU4053BCFV-E2	0	0
I605	CA01301R	TRS.CHIP NDC7002N	0	0
I700	CK37121R	IC (LUD5)		0
I701	CK37121R	DIGITAL MONOLITHIC IC (LVDS)	0	
I704	CK37193R	MONO IC SI-3033LSA-TL	0	
I705	CK37191R	MONO IC SI-3018LSA-TL	0	
I706	CK38891U	IC CXD3536R	0	
I708	CK36501R	DIGITAL MONOLITHIC IC (M24128-WMN6T)	0	
I709	CK34391R	DIGITAL MONOLITHIC IC (SN74ACT244PWR)	0	
I710	CK34391R	DIGITAL MONOLITHIC IC (SN74ACT244PWR)	0	

PRODUCT SERVICE NOTE: Components marked with a ⚠ have special characteristics important to safety. Before replacing any of these components, read carefully, the PRODUCT SAFETY NOTICE of this Service Manual. Don't degrade the safety of the receiver through improper servicing.

SYMBOL NO.	PART NO.	PART DESCRIPTION	50"	60"	SYMBOL NO.	PART NO.	PART DESCRIPTION	50"	60"
I711	CK38901U	IC CXA7005R	0		L008	BH00697R	FILTER COIL 100UH	0	0
I712	CK38901U	IC CXA7005R	0		L010	BH00697R	FILTER COIL 100UH	0	0
I714	CK37193R	MONO IC SI-3033LSA-TL	0		L011	BH00697R	FILTER COIL 100UH	0	0
I715	CK37193R	MONO IC SI-3033LSA-TL	0		L012	2123781R	FILTER COIL 100UH(EL0607)	0	0
I717	CK38917R	DIGITAL MONOLITHIC IC (SN74LVC32APWR)	0		L015	2123781R	FILTER COIL 100UH(EL0607)	0	0
I718	CK38323R	DIGITAL MONOLITHIC IC (SN74LVC1G**DCKR)	0		L017	BH00697R	FILTER COIL 100UH	0	0
I723	CK38901U	IC CXA7005R	0		L019	2123781R	FILTER COIL 100UH(EL0607)	0	0
I724	CK38901U	IC CXA7005R	0		L021	2123781R	FILTER COIL 100UH(EL0607)	0	0
I735	CK38901U	IC CXA7005R	0		L026	BH00697R	FILTER COIL 100UH	0	0
I736	CK38901U	IC CXA7005R	0		L027	BH00697R	FILTER COIL 100UH	0	0
I737	CK37218R	MONO IC TK11150CSCL	0		L028	BH00697R	FILTER COIL 100UH	0	0
I738	CK37406R	MONO IC SI-3012KS	0		L601	BA00714R	3225 CHIP COIL 100UH	0	0
I750	CK38931U	IC L3E07070K0A		0	L602	BA00712R	3225 CHIP COIL 47UH	0	
I751	CK38917R	DIGITAL MONOLITHIC IC (SN74LVC32APWR)		0	L603	BA00714R	3225 CHIP COIL 100UH	0	0
I752	CK38323R	DIGITAL MONOLITHIC IC (SN74LVC1G**DCKR)		0	L604	BA00714R	3225 CHIP COIL 100UH	0	0
I7A0	CK39631U	IC L3E06110D0A		0	L605	BA00714R	3225 CHIP COIL 100UH	0	0
I7A1	CK34691R	ANALOG MONOLITHIC IC (THS4062CDR)		0	L700	BA00712R	3325CHP47UU		0
I7A2	CK06371R	ANALOG MONOLITHIC IC(BA4560F)		0	L701	BA00712R	3225 CHIP COIL 47UH	0	0
I7F0	CK39631U	IC L3E06110D0A		0	L702	BA00712R	3225 CHIP COIL 47UH	0	
I7F1	CK34691R	ANALOG MONOLITHIC IC (THS4062CDR)		0	L706	BA00714R	3225 CHIP COIL 100UH	0	
I7K0	CK39631U	IC L3E06110D0A		0	L707	BA00707R	3225 CHIP COIL 10UH	0	
I7K1	CK18641R	IC BA10358FT1		0	L708	BA00707R	3225 CHIP COIL 10UH	0	
I7K3	CK18641R	IC BA10358FT1		0	L709	BA00707R	3225 CHIP COIL 10UH	0	
I7K4	CK01872R	IC BU4053BCFV-E2		0	L710	BA00712R	3225 CHIP COIL 47UH	0	
I7K5	CK34691R	ANALOG MONOLITHIC IC (THS4062CDR)		0	L711	BA00707R	3225 CHIP COIL 10UH	0	
I800	CK08851R	ANALOG MONOLITHIC IC (PQ20VZ11-TP)		0	L712	BA00712R	3225 CHIP COIL 47UH	0	
I801	CK38378R	DIGITAL MONO IC SI-3012KM		0	L713	BA00712R	3225 CHIP COIL 47UH	0	
I802	CK38372R	DIGITAL MONO IC SI-3018KM		0	L714	BA00707R	3225 CHIP COIL 10UH	0	
I803	CK37193R	MONO IC SI-3033LSA-TL		0	L715	BA00707R	3225 CHIP COIL 10UH	0	
I804	CK37193R	MONO IC SI-3033LSA-TL		0	L716	BA00712R	3225 CHIP COIL 47UH	0	
I808	CK08851R	ANALOG MONOLITHIC IC (PQ20VZ11-TP)		0	L717	BA00712R	3225 CHIP COIL 47UH	0	
⚠ I901	CZ00868	HYBRID IC (STR-F6668B)		0	L718	BA00712R	3225 CHIP COIL 47UH	0	
⚠ I901	CZ00868	HYBRID IC (STR-F6668B)	0		L719	BA00712R	3225 CHIP COIL 47UH	0	
⚠ I902	CP08261U	IC H11A817B-300W	0	0	L731	BA00712R	3225 CHIP COIL 47UH	0	
I903	CP08261U	IC H11A817B-300W	0	0	L732	BA00712R	3225 CHIP COIL 47UH	0	
I906	CP05163F	IC SI-3090F	0	0	L733	BA00707R	3225 CHIP COIL 10UH	0	
I907	CP05163F	IC SI-3090F	0	0	L734	BA00707R	3225 CHIP COIL 10UH	0	
⚠ I909	CP08301	IC STA821M	0	0	L735	BA00712R	3225 CHIP COIL 47UH	0	
I910	CP08301	IC STA821M	0	0	L736	BA00712R	3225 CHIP COIL 47UH	0	
I911	CP05164F	IC SI-3157F	0		L737	BA00712R	3225 CHIP COIL 47UH	0	
I912	CP08111U	MONO IC SI-8010GL	0	0	L738	BA00712R	3225 CHIP COIL 47UH	0	
IA01	CK38621R	IC NJM1160M-TE1	0	0	L749	BA00712R	3225 CHIP COIL 47UH	0	
IA02	CK33801R	IC NJM2068F	0	0	L750	BA00707R	3225 CHIP COIL 10UH	0	0
IA51	CK01872R	IC BU4053BCFV-E2	0	0	L751	BA00707R	3225 CHIP COIL 10UH	0	0
IAA1	2004751	IC TA8200AH	0	0	L752	BA00707R	3225 CHIP COIL 10UH	0	0
IC01	CK01872R	IC BU4053BCFV-E2	0	0	L753	BA00712R	3225 CHIP COIL 47UH	0	
IC02	CK31041R	IC TA1287F	0	0	L754	BA00712R	3225 CHIP COIL 47UH	0	
IE01	CK31041R	IC TA1287F	0	0	L755	BA00712R	3225 CHIP COIL 47UH	0	
IE02	CK38102R	VIDEO SWITCH IC NJM2584AM(TE1)	0	0	L756	BA00712R	3225 CHIP COIL 47UH	0	
IJ01	CK37193R	MONO IC SI-3033LSA-TL	0	0	L7A0	BA00707R	3225 CHIP COIL 10UH		0
IJ02	CK37051R	ANALOG MONOLITHIC IC(BD4729G)	0	0	L7A1	BA00712R	3225 CHIP COIL 47UH		0
IJ03	CK35163R	IC SII907BCQ52	0	0	L7A2	BA00712R	3225 CHIP COIL 47UH		0
IJ04	CA01301R	TRS.CHIP NDC7002N	0	0	L7A3	BA00707R	3225 CHIP COIL 10UH		0
IJ05	CK35895R	IC CAT24WC02J1	0	0	L7F0	BA00707R	3225 CHIP COIL 10UH		0
IM01	CP08281U	ANALOG MONOLITHIC IC NJW2137D		0	L7F1	BA00712R	3225 CHIP COIL 47UH		0
IM01	CP08281U	ANALOG MONOLITHIC IC NJW2137D	0		L7F2	BA00712R	3225 CHIP COIL 47UH		0
IV01	CK30941U	IC CXA2069Q	0	0	L7F3	BA00707R	3225 CHIP COIL 10UH		0
IV02	CK07631R	DIGITAL MONOLITHIC IC (TC90A45F)	0	0	L7K0	BA00707R	3225 CHIP COIL 10UH		0
IV03	CK34811U	IC MM1519XQ	0	0	L7K1	BA00712R	3225 CHIP COIL 47UH		0
IV04	CK38102R	VIDEO SWITCH IC NJM2584AM(TE1)	0	0	L7K2	BA00712R	3225 CHIP COIL 47UH		0
IV06	CK01872R	IC BU4053BCFV-E2	0	0	L7K3	BA00707R	3225 CHIP COIL 10UH		0
IV07	CK01872R	IC BU4053BCFV-E2	0	0	⚠ L901	BZ05691	LINE FILTER 7.5MH		0
IV11	CK31071R	IC CXA1875AM	0	0	⚠ L901	BZ05691	LINE FILTER 7.5MH	0	
IY01	CK38701U	IC UPD64084GC-8EA-A	0	0	⚠ L903	BZ05633	LINE FILTER 10MH	0	0
IY02	CK37053R	RESET IC BD4727G	0	0	⚠ L904	BZ04581	LINE FILTER 4.7MH 3.5A	0	0
IY03	CK38721R	ANALOG MONOLITHIC IC(TA1383FG)	0	0	L905	2125806N	FILT.COIL(LHL08 47UH)	0	0
IY04	CK38721R	ANALOG MONOLITHIC IC(TA1383FG)	0	0	L908	BH01342M	COIL FERRITE BEADS 2.3UH	0	0
					L909	BH01342M	COIL FERRITE BEADS 2.3UH	0	0
		COILS			L912	BH01342M	COIL FERRITE BEADS 2.3UH	0	0
L001	BH00697R	FILTER COIL 100UH	0	0	L913	BH01342M	COIL FERRITE BEADS 2.3UH	0	0
L002	2123781R	FILTER COIL 100UH(EL0607)	0	0	L915	BH01341M	COIL FERRITE BEADS 0.8UH	0	0
L003	BH00697R	FILTER COIL 100UH	0	0	L916	BH01341M	COIL FERRITE BEADS 0.8UH	0	0
L004	BH00697R	FILTER COIL 100UH	0	0	L917	2125806N	FILT.COIL(LHL08 47UH)	0	0
L005	BH00697R	FILTER COIL 100UH	0	0	L919	2125797N	FILT.COIL(LHL08 10UH)	0	0
L006	BH00697R	FILTER COIL 100UH	0	0	L920	2125797N	FILT.COIL(LHL08 10UH)	0	0

PRODUCT SERVICE NOTE: Components marked with a ⚠ have special characteristics important to safety. Before replacing any of these components, read carefully, the PRODUCT SAFETY NOTICE of this Service Manual. Don't degrade the safety of the receiver through improper servicing.

SYMBOL NO.	PART NO.	PART DESCRIPTION	50"	60"	SYMBOL NO.	PART NO.	PART DESCRIPTION	50"	60"
L923	2125811N	FILT.COIL(LHL08 100UH)	0	0	Q009	CA01261R	TRS.CHIP 2SA1980S	0	0
L924	2125811N	FILT.COIL(LHL08 100UH)	0	0	Q010	CA01261R	TRS.CHIP 2SA1980S	0	0
L925	BH01729	7312N TYPE COIL 47UH 1.62A	0	0	Q011	CA01271R	TRS.CHIP 2SC5343S	0	0
L927	2125811N	FILT.COIL(LHL08 100UH)	0	0	Q012	CA01261R	TRS.CHIP 2SA1980S	0	0
L928	2125811N	FILT.COIL(LHL08 100UH)	0	0	Q013	CA01271R	TRS.CHIP 2SC5343S	0	0
L929	BH01851	7312H TYPE COIL 100UH	0	0	Q014	CA01261R	TRS.CHIP 2SA1980S	0	0
L931	BH01851	7312H TYPE COIL 100UH		0	Q015	CA01271R	TRS.CHIP 2SC5343S	0	0
L931	BH01851	7312H TYPE COIL 100UH	0		Q016	CA01261R	TRS.CHIP 2SA1980S	0	0
L933	2125811N	FILT.COIL(LHL08 100UH)	0	0	Q017	CA01271R	TRS.CHIP 2SC5343S	0	0
L934	2125803N	FILT.COIL(LHL08 27UH)	0	0	Q018	CF02771R	TRS. KTA1270	0	0
L935	2125797N	FILT.COIL(LHL08 10UH)	0	0	Q019	CF02771R	TRS. KTA1270	0	0
L936	2125811N	FILT.COIL(LHL08 100UH)	0	0	Q020	CA01261R	TRS.CHIP 2SA1980S	0	0
L937	2125811N	FILT.COIL(LHL08 100UH)	0	0	Q021	CA01271R	TRS.CHIP 2SC5343S	0	0
L938	2125811N	FILT.COIL(LHL08 100UH)	0	0	Q023	CA01271R	TRS.CHIP 2SC5343S	0	0
L940	BH01342M	COIL FERRITE BEADS 2.3UH	0	0	Q026	CA01271R	TRS.CHIP 2SC5343S	0	0
LA01	BH00697R	FILTER COIL 100UH	0	0	Q027	CA01271R	TRS.CHIP 2SC5343S	0	0
LA51	BH00697R	FILTER COIL 100UH	0	0	Q028	CA01271R	TRS.CHIP 2SC5343S	0	0
LAA2	BH01341M	COIL FERRITE BEADS 0.8UH	0	0	Q031	CA01271R	TRS.CHIP 2SC5343S	0	0
LAA3	BH01341M	COIL FERRITE BEADS 0.8UH	0	0	Q032	CA01271R	TRS.CHIP 2SC5343S	0	0
LAM2	BH01341M	COIL FERRITE BEADS 0.8UH	0	0	Q033	CA01271R	TRS.CHIP 2SC5343S	0	0
LAM3	BH01341M	COIL FERRITE BEADS 0.8UH	0	0	Q035	CA01261R	TRS.CHIP 2SA1980S	0	0
LC01	BH00697R	FILTER COIL 100UH	0	0	Q036	CA01271R	TRS.CHIP 2SC5343S	0	0
LC02	BH00697R	FILTER COIL 100UH	0	0	Q037	CA01271R	TRS.CHIP 2SC5343S	0	0
LC03	BH00697R	FILTER COIL 100UH	0	0	Q038	CA01271R	TRS.CHIP 2SC5343S	0	0
LE01	BH00697R	FILTER COIL 100UH	0	0	Q039	CA01271R	TRS.CHIP 2SC5343S	0	0
LE02	BH00675R	COIL 2.2UH	0	0	Q040	CA01271R	TRS.CHIP 2SC5343S	0	0
LE03	BH00675R	COIL 2.2UH	0	0	Q041	CA01261R	TRS.CHIP 2SA1980S	0	0
LE05	BH00697R	FILTER COIL 100UH	0	0	Q042	CA01271R	TRS.CHIP 2SC5343S	0	0
LJ01	9374575W	UL CSA1007-24HP CODE GREEN	0	0	Q044	CA01271R	TRS.CHIP 2SC5343S	0	0
LJ01	BH00697R	FILTER COIL 100UH	0	0	Q050	CA01271R	TRS.CHIP 2SC5343S	0	0
LJ02	BM00289R	FILTER BLM18BD471SN1D	0	0	Q052	CA01271R	TRS.CHIP 2SC5343S	0	0
LJ03	BM00289R	FILTER BLM18BD471SN1D	0	0	Q053	CA01271R	TRS.CHIP 2SC5343S	0	0
LJ04	BM00289R	FILTER BLM18BD471SN1D	0	0	Q449	CA01261R	TRS.CHIP 2SA1980S	0	0
LJ05	BM00289R	FILTER BLM18BD471SN1D	0	0	Q450	CA01261R	TRS.CHIP 2SA1980S	0	0
LJ06	BM00289R	FILTER BLM18BD471SN1D	0	0	Q524	CA01261R	TRS.CHIP 2SA1980S	0	0
LJ07	BM00289R	FILTER BLM18BD471SN1D	0	0	Q527	CA01271R	TRS.CHIP 2SC5343S	0	0
LJ08	BM00289R	FILTER BLM18BD471SN1D	0	0	Q528	CA01261R	TRS.CHIP 2SA1980S	0	0
LJ09	BM00289R	FILTER BLM18BD471SN1D	0	0	Q529	CA01271R	TRS.CHIP 2SC5343S	0	0
LJ10	BM00289R	FILTER BLM18BD471SN1D	0	0	Q561	CA01271R	TRS.CHIP 2SC5343S	0	0
LM01	BH00697R	FILTER COIL 100UH	0	0	Q562	CA01271R	TRS.CHIP 2SC5343S	0	0
LV01	BH00697R	FILTER COIL 100UH	0	0	Q563	CA01271R	TRS.CHIP 2SC5343S	0	0
LV02	BH00697R	FILTER COIL 100UH	0	0	Q564	CA01271R	TRS.CHIP 2SC5343S	0	0
LV03	BH00697R	FILTER COIL 100UH	0	0	Q601	CA01271R	TRS.CHIP 2SC5343S	0	0
LV04	BH00697R	FILTER COIL 100UH	0	0	Q703	CA01261R	TRS.CHIP 2SA1980S	0	
LV05	BH00697R	FILTER COIL 100UH	0	0	Q704	CA01271R	TRS.CHIP 2SC5343S	0	
LV06	BH00697R	FILTER COIL 100UH	0	0	Q705	CA01261R	TRS.CHIP 2SA1980S	0	
LV07	BH00686R	COIL 15UH	0	0	Q706	CA01271R	TRS.CHIP 2SC5343S	0	
LV08	BH00697R	FILTER COIL 100UH	0	0	Q717	CA01261R	TRS.CHIP 2SA1980S	0	
LV10	BH00697R	FILTER COIL 100UH	0	0	Q718	CA01271R	TRS.CHIP 2SC5343S	0	
LV11	BH00697R	FILTER COIL 100UH	0	0	Q719	CA01261R	TRS.CHIP 2SA1980S	0	
LV15	BH00697R	FILTER COIL 100UH	0	0	Q720	CA01271R	TRS.CHIP 2SC5343S	0	
LY01	BH00691R	COIL 33UH	0	0	Q731	CA01261R	TRS.CHIP 2SA1980S	0	
LY02	BH00691R	COIL 33UH	0	0	Q732	CA01271R	TRS.CHIP 2SC5343S	0	
LY03	BH00697R	FILTER COIL 100UH	0	0	Q733	CA01261R	TRS.CHIP 2SA1980S	0	
LY04	BH00697R	FILTER COIL 100UH	0	0	Q734	CA01271R	TRS.CHIP 2SC5343S	0	
LY05	BH00697R	FILTER COIL 100UH	0	0	Q801	CA01261R	TRS.CHIP 2SA1980S	0	
LY06	BH00697R	FILTER COIL 100UH	0	0	Q902	CF01421R	TRS. KTC3198 (GR) TAPE	0	0
LY07	BH00679R	COIL 4.7UH	0	0	Q903	CF01421R	TRS. KTC3198 (GR) TAPE	0	0
LY08	BH00697R	FILTER COIL 100UH	0	0	Q904	CF01421R	TRS. KTC3198 (GR) TAPE	0	0
LY09	BH00697R	FILTER COIL 100UH	0	0	⚠ Q905	CF01421R	TRS. KTC3198 (GR) TAPE	0	0
LY10	2123107M	LAL02 AXIAL COIL 22UH-K	0	0	Q906	CF02771R	TRS. KTA1270	0	0
LY11	BH00697R	FILTER COIL 100UH	0	0	Q907	CF02771R	TRS. KTA1270	0	0
LY12	BH00697R	FILTER COIL 100UH	0	0	Q908	CF01421R	TRS. KTC3198 (GR) TAPE	0	0
LY13	BH00697R	FILTER COIL 100UH	0	0	Q7F0	CA01261R	TRS.CHIP 2SA1980S		0
LY14	BH00697R	FILTER COIL 100UH	0	0	Q7F1	CA01271R	TRS.CHIP 2SC5343S		0
					Q7K0	CA01271R	TRS.CHIP 2SC5343S		0
		TRANSISTORS			Q7K1	CA01271R	TRS.CHIP 2SC5343S		0
Q001	CA01271R	TRS.CHIP 2SC5343S	0	0	Q7K2	CA01271R	TRS.CHIP 2SC5343S		0
Q002	CA01271R	TRS.CHIP 2SC5343S	0	0	Q7K3	CA01271R	TRS.CHIP 2SC5343S		0
Q003	CA01271R	TRS.CHIP 2SC5343S	0	0	Q7K4	CA01261R	TRS.CHIP 2SA1980S		0
Q004	CA01271R	TRS.CHIP 2SC5343S	0	0	QA01	CA00461R	TRS.CHIP 2SD2114K 20V TAPE	0	0
Q005	CA01271R	TRS.CHIP 2SC5343S	0	0	QA02	CA00461R	TRS.CHIP 2SD2114K 20V TAPE	0	0
Q006	CA01271R	TRS.CHIP 2SC5343S	0	0	QA03	CA00461R	TRS.CHIP 2SD2114K 20V TAPE	0	0
Q007	CA01271R	TRS.CHIP 2SC5343S	0	0	QA04	CA00461R	TRS.CHIP 2SD2114K 20V TAPE	0	0
Q008	CA01271R	TRS.CHIP 2SC5343S	0	0	QA05	CA01271R	TRS.CHIP 2SC5343S	0	0

PRODUCT SERVICE NOTE: Components marked with a ⚠ have special characteristics important to safety. Before replacing any of these components, read carefully, the PRODUCT SAFETY NOTICE of this Service Manual. Don't degrade the safety of the receiver through improper servicing.

SYMBOL NO.	PART NO.	PART DESCRIPTION	50"	60"	SYMBOL NO.	PART NO.	PART DESCRIPTION	50"	60"
QA06	CA01271R	TRS.CHIP 2SC5343S	0	0	QV07	CA01271R	TRS.CHIP 2SC5343S	0	0
QA51	CA01271R	TRS.CHIP 2SC5343S	0	0	QV08	CA01271R	TRS.CHIP 2SC5343S	0	0
QA52	CA01261R	TRS.CHIP 2SA1980S	0	0	QV09	CA01271R	TRS.CHIP 2SC5343S	0	0
QA53	CA01271R	TRS.CHIP 2SC5343S	0	0	QV10	CF02781R	TRS. KTC200YAT	0	0
QA54	CA01271R	TRS.CHIP 2SC5343S	0	0	QV11	CF02781R	TRS. KTC200YAT	0	0
QA55	CA01261R	TRS.CHIP 2SA1980S	0	0	QV12	CF02781R	TRS. KTC200YAT	0	0
QA56	CA01271R	TRS.CHIP 2SC5343S	0	0	QV13	CA01271R	TRS.CHIP 2SC5343S	0	0
QA57	CA01271R	TRS.CHIP 2SC5343S	0	0	QV14	CA01271R	TRS.CHIP 2SC5343S	0	0
QA58	CA01271R	TRS.CHIP 2SC5343S	0	0	QV15	CA01261R	TRS.CHIP 2SA1980S	0	0
QAA1	CF01421R	TRS. KTC3198 (GR) TAPE	0	0	QV16	CA01271R	TRS.CHIP 2SC5343S	0	0
QAA2	CF01421R	TRS. KTC3198 (GR) TAPE	0	0	QV17	CA01261R	TRS.CHIP 2SA1980S	0	0
QAM1	CF01421R	TRS. KTC3198 (GR) TAPE	0	0	QV18	CA01271R	TRS.CHIP 2SC5343S	0	0
QAM2	CF01421R	TRS. KTC3198 (GR) TAPE	0	0	QV19	CA01271R	TRS.CHIP 2SC5343S	0	0
QE01	CA01261R	TRS.CHIP 2SA1980S	0	0	QV20	CA01261R	TRS.CHIP 2SA1980S	0	0
QE02	CA01271R	TRS.CHIP 2SC5343S	0	0	QV21	CA01271R	TRS.CHIP 2SC5343S	0	0
QE03	CA01261R	TRS.CHIP 2SA1980S	0	0	QV22	CA01261R	TRS.CHIP 2SA1980S	0	0
QE04	CA01261R	TRS.CHIP 2SA1980S	0	0	QV23	CA01271R	TRS.CHIP 2SC5343S	0	0
QE05	CA01271R	TRS.CHIP 2SC5343S	0	0	QV24	CA01261R	TRS.CHIP 2SA1980S	0	0
QE06	CA01261R	TRS.CHIP 2SA1980S	0	0	QV25	CA01271R	TRS.CHIP 2SC5343S	0	0
QE07	CA01271R	TRS.CHIP 2SC5343S	0	0	QV26	CA01271R	TRS.CHIP 2SC5343S	0	0
QE08	CA01261R	TRS.CHIP 2SA1980S	0	0	QV27	CA01261R	TRS.CHIP 2SA1980S	0	0
QE09	CA01261R	TRS.CHIP 2SA1980S	0	0	QV28	CA01271R	TRS.CHIP 2SC5343S	0	0
QE10	CA01261R	TRS.CHIP 2SA1980S	0	0	QV29	CA01271R	TRS.CHIP 2SC5343S	0	0
QE11	CA01271R	TRS.CHIP 2SC5343S	0	0	QV30	CA01271R	TRS.CHIP 2SC5343S	0	0
QE12	CA01261R	TRS.CHIP 2SA1980S	0	0	QV31	CA01261R	TRS.CHIP 2SA1980S	0	0
QE13	CA01261R	TRS.CHIP 2SA1980S	0	0	QV32	CA01271R	TRS.CHIP 2SC5343S	0	0
QE14	CA01271R	TRS.CHIP 2SC5343S	0	0	QV33	CA01261R	TRS.CHIP 2SA1980S	0	0
QE15	CA01261R	TRS.CHIP 2SA1980S	0	0	QV34	CA01261R	TRS.CHIP 2SA1980S	0	0
QE16	CA01261R	TRS.CHIP 2SA1980S	0	0	QV35	CA01261R	TRS.CHIP 2SA1980S	0	0
QE17	CA01271R	TRS.CHIP 2SC5343S	0	0	QV36	CA01261R	TRS.CHIP 2SA1980S	0	0
QE18	CA01261R	TRS.CHIP 2SA1980S	0	0	QV37	CA01261R	TRS.CHIP 2SA1980S	0	0
QE19	CA01261R	TRS.CHIP 2SA1980S	0	0	QV38	CA01261R	TRS.CHIP 2SA1980S	0	0
QE20	CA01261R	TRS.CHIP 2SA1980S	0	0	QV39	CA01271R	TRS.CHIP 2SC5343S	0	0
QE21	CA01261R	TRS.CHIP 2SA1980S	0	0	QV40	CA01271R	TRS.CHIP 2SC5343S	0	0
QE22	CA01261R	TRS.CHIP 2SA1980S	0	0	QV41	CA01271R	TRS.CHIP 2SC5343S	0	0
QE23	CA01271R	TRS.CHIP 2SC5343S	0	0	QXA0	CA01271R	TRS.CHIP 2SC5343S	0	0
QE24	CA01261R	TRS.CHIP 2SA1980S	0	0	QXA1	CA01271R	TRS.CHIP 2SC5343S	0	0
QE25	CA01261R	TRS.CHIP 2SA1980S	0	0	QY01	CA01271R	TRS.CHIP 2SC5343S	0	0
QE26	CA01261R	TRS.CHIP 2SA1980S	0	0	QY02	CA01261R	TRS.CHIP 2SA1980S	0	0
QE27	CA01271R	TRS.CHIP 2SC5343S	0	0	QY03	CA01271R	TRS.CHIP 2SC5343S	0	0
QE28	CA01261R	TRS.CHIP 2SA1980S	0	0	QY04	CA01261R	TRS.CHIP 2SA1980S	0	0
QE29	CA01271R	TRS.CHIP 2SC5343S	0	0	QY05	CA01261R	TRS.CHIP 2SA1980S	0	0
QE30	CA01271R	TRS.CHIP 2SC5343S	0	0	QY06	CA01271R	TRS.CHIP 2SC5343S	0	0
QE31	CA01261R	TRS.CHIP 2SA1980S	0	0	QY07	CA01261R	TRS.CHIP 2SA1980S	0	0
QE32	CA01261R	TRS.CHIP 2SA1980S	0	0	QY08	CA01271R	TRS.CHIP 2SC5343S	0	0
QE33	CA01271R	TRS.CHIP 2SC5343S	0	0	QY09	CA01261R	TRS.CHIP 2SA1980S	0	0
QE34	CA01261R	TRS.CHIP 2SA1980S	0	0	QY10	CA01271R	TRS.CHIP 2SC5343S	0	0
QE35	CA01261R	TRS.CHIP 2SA1980S	0	0	QY11	CA01261R	TRS.CHIP 2SA1980S	0	0
QE36	CA01271R	TRS.CHIP 2SC5343S	0	0	QY12	CA01271R	TRS.CHIP 2SC5343S	0	0
QE37	CA01261R	TRS.CHIP 2SA1980S	0	0	QY13	CA01261R	TRS.CHIP 2SA1980S	0	0
QE38	CA01261R	TRS.CHIP 2SA1980S	0	0	QY14	CA01271R	TRS.CHIP 2SC5343S	0	0
QE39	CA01271R	TRS.CHIP 2SC5343S	0	0	QY15	CA01261R	TRS.CHIP 2SA1980S	0	0
QE40	CA01271R	TRS.CHIP 2SC5343S	0	0	QY16	CA01271R	TRS.CHIP 2SC5343S	0	0
QJ01	CA01261R	TRS.CHIP 2SA1980S	0	0	QY17	CA01271R	TRS.CHIP 2SC5343S	0	0
QJ02	CA01261R	TRS.CHIP 2SA1980S	0	0	QY18	CA01271R	TRS.CHIP 2SC5343S	0	0
QJ03	CA01261R	TRS.CHIP 2SA1980S	0	0	QY19	CA01271R	TRS.CHIP 2SC5343S	0	0
QJ04	CA01271R	TRS.CHIP 2SC5343S	0	0	QY20	CA01261R	TRS.CHIP 2SA1980S	0	0
QJ05	CA01271R	TRS.CHIP 2SC5343S	0	0	QY21	CA01261R	TRS.CHIP 2SA1980S	0	0
QM01	CF01421R	TRS. KTC3198 (GR) TAPE	0	0	QY22	CA01261R	TRS.CHIP 2SA1980S	0	0
QM03	CF01421R	TRS. KTC3198 (GR) TAPE	0	0	QY23	CA01261R	TRS.CHIP 2SA1980S	0	0
QM04	CF01421R	TRS. KTC3198 (GR) TAPE	0	0	QY24	CA01261R	TRS.CHIP 2SA1980S	0	0
QM05	CF01421R	TRS. KTC3198 (GR) TAPE	0	0	QY25	CA01271R	TRS.CHIP 2SC5343S	0	0
QM06	CF01421R	TRS. KTC3198 (GR) TAPE	0	0	QY26	CA01271R	TRS.CHIP 2SC5343S	0	0
QM07	CF01421R	TRS. KTC3198 (GR) TAPE	0	0	QY28	CA01261R	TRS.CHIP 2SA1980S	0	0
QM08	CF01421R	TRS. KTC3198 (GR) TAPE	0	0	QY29	CA01261R	TRS.CHIP 2SA1980S	0	0
QM09	CF01421R	TRS. KTC3198 (GR) TAPE	0	0	QY30	CA01261R	TRS.CHIP 2SA1980S	0	0
QM10	CF01421R	TRS. KTC3198 (GR) TAPE	0	0	QY31	CA01271R	TRS.CHIP 2SC5343S	0	0
QM11	CF01421R	TRS. KTC3198 (GR) TAPE	0	0	QY32	CA01271R	TRS.CHIP 2SC5343S	0	0
QM12	CF01421R	TRS. KTC3198 (GR) TAPE	0	0					
QV01	CA01271R	TRS.CHIP 2SC5343S	0	0			**RESISTORS**		
QV02	CA01261R	TRS.CHIP 2SA1980S	0	0	R001	0790037R	RES.CHIP 1/16W 1.0K OHM	0	0
QV03	CA01271R	TRS.CHIP 2SC5343S	0	0	R002	0790059R	RES.CHIP 1/16W 47K OHM	0	0
QV04	CA01271R	TRS.CHIP 2SC5343S	0	0	R003	0790059R	RES.CHIP 1/16W 47K OHM	0	0
QV05	CA01261R	TRS.CHIP 2SA1980S	0	0	R004	0790037R	RES.CHIP 1/16W 1.0K OHM	0	0
QV06	CA01261R	TRS.CHIP 2SA1980S	0	0	R006	0790024R	RES.CHIP 1/16W 100 OHM	0	0

PRODUCT SERVICE NOTE: Components marked with a ⚠ have special characteristics important to safety. Before replacing any of these components, read carefully, the PRODUCT SAFETY NOTICE of this Service Manual. Don't degrade the safety of the receiver through improper servicing.

SYMBOL NO.	PART NO.	PART DESCRIPTION	50"	60"	SYMBOL NO.	PART NO.	PART DESCRIPTION	50"	60"
R007	0790024R	RES.CHIP 1/16W 100 OHM	0	0	R099	0790037R	RES.CHIP 1/16W 1.0K OHM	0	0
R008	0790037R	RES.CHIP 1/16W 1.0K OHM	0	0	R0A2	0790037R	RES.CHIP 1/16W 1.0K OHM	0	0
R009	0790001R	CHIP RESISTOR RECJUMPER-1-16C16T1608	0	0	R0A9	0790001R	CHIP RESISTOR RECJUMPER-1-16C16T1608	0	0
R010	0790051R	RES.CHIP 1/16W 10K OHM	0	0	R0B0	0790037R	RES.CHIP 1/16W 1.0K OHM	0	0
R011	0790024R	RES.CHIP 1/16W 100 OHM	0	0	R0B2	0790001R	CHIP RESISTOR RECJUMPER-1-16C16T1608	0	0
R012	0790051R	RES.CHIP 1/16W 10K OHM	0	0	R0B4	0790037R	RES.CHIP 1/16W 1.0K OHM	0	0
R013	0790024R	RES.CHIP 1/16W 100 OHM	0	0	R0C8	0790051R	RES.CHIP 1/16W 10K OHM	0	0
R016	0790055R	RES.CHIP 1/16W 22K OHM	0	0	R0D0	0790037R	RES.CHIP 1/16W 1.0K OHM	0	0
R017	0790001R	CHIP RESISTOR RECJUMPER-1-16C16T1608	0	0	R0D1	0790037R	RES.CHIP 1/16W 1.0K OHM	0	0
R019	0790037R	RES.CHIP 1/16W 1.0K OHM	0	0	R0D2	0790051R	RES.CHIP 1/16W 10K OHM	0	0
R020	0790042R	RES.CHIP 1/16W 2.2K OHM	0	0	R0D3	0790051R	RES.CHIP 1/16W 10K OHM	0	0
R021	0790024R	RES.CHIP 1/16W 100 OHM	0	0	R0D4	0790051R	RES.CHIP 1/16W 10K OHM	0	0
R022	0790024R	RES.CHIP 1/16W 100 OHM	0	0	R0D5	0790051R	RES.CHIP 1/16W 10K OHM	0	0
R023	0790037R	RES.CHIP 1/16W 1.0K OHM	0	0	R0D6	0790051R	RES.CHIP 1/16W 10K OHM	0	0
R024	0790024R	RES.CHIP 1/16W 100 OHM	0	0	R0D8	0790051R	RES.CHIP 1/16W 10K OHM	0	0
R026	0790037R	RES.CHIP 1/16W 1.0K OHM	0	0	R0D9	0790024R	RES.CHIP 1/16W 100 OHM	0	0
R028	0790024R	RES.CHIP 1/16W 100 OHM	0	0	R100	0790037R	RES.CHIP 1/16W 1.0K OHM	0	0
R030	0790051R	RES.CHIP 1/16W 10K OHM	0	0	R101	0790051R	RES.CHIP 1/16W 10K OHM	0	0
R032	0790047R	RES.CHIP 1/16W 5.6K OHM	0	0	R108	0790001R	CHIP RESISTOR RECJUMPER-1-16C16T1608	0	0
R033	0790051R	RES.CHIP 1/16W 10K OHM	0	0	R111	0790037R	RES.CHIP 1/16W 1.0K OHM	0	0
R034	0790051R	RES.CHIP 1/16W 10K OHM	0	0	R112	0790059R	RES.CHIP 1/16W 47K OHM	0	0
R035	0790047R	RES.CHIP 1/16W 5.6K OHM	0	0	R113	0790028R	RES.CHIP 1/16W 220 OHM	0	0
R036	0790001R	CHIP RESISTOR RECJUMPER-1-16C16T1608	0	0	R115	0790024R	RES.CHIP 1/16W 100 OHM	0	0
R038	0790024R	RES.CHIP 1/16W 100 OHM	0	0	R116	0790024R	RES.CHIP 1/16W 100 OHM	0	0
R039	0790024R	RES.CHIP 1/16W 100 OHM	0	0	R117	0790037R	RES.CHIP 1/16W 1.0K OHM	0	0
R041	0790024R	RES.CHIP 1/16W 100 OHM	0	0	R118	0790037R	RES.CHIP 1/16W 1.0K OHM	0	0
R042	0790024R	RES.CHIP 1/16W 100 OHM	0	0	R119	0790037R	RES.CHIP 1/16W 1.0K OHM	0	0
R043	0790024R	RES.CHIP 1/16W 100 OHM	0	0	R120	0790037R	RES.CHIP 1/16W 1.0K OHM	0	0
R044	0790024R	RES.CHIP 1/16W 100 OHM	0	0	R121	0790037R	RES.CHIP 1/16W 1.0K OHM	0	0
R045	0790024R	RES.CHIP 1/16W 100 OHM	0	0	R123	0790059R	RES.CHIP 1/16W 47K OHM	0	0
R046	0790037R	RES.CHIP 1/16W 1.0K OHM	0	0	R124	0790059R	RES.CHIP 1/16W 47K OHM	0	0
R047	0790037R	RES.CHIP 1/16W 1.0K OHM	0	0	R125	0790047R	RES.CHIP 1/16W 5.6K OHM	0	0
R048	0790037R	RES.CHIP 1/16W 1.0K OHM	0	0	R126	0790024R	RES.CHIP 1/16W 100 OHM	0	0
R049	0790024R	RES.CHIP 1/16W 100 OHM	0	0	R127	0790038R	RES.CHIP 1/16W 1.2K OHM	0	0
R050	0790024R	RES.CHIP 1/16W 100 OHM	0	0	R128	0790037R	RES.CHIP 1/16W 1.0K OHM	0	0
R051	0790037R	RES.CHIP 1/16W 1.0K OHM	0	0	R129	0790037R	RES.CHIP 1/16W 1.0K OHM	0	0
R057	0790051R	RES.CHIP 1/16W 10K OHM	0	0	R131	0790038R	RES.CHIP 1/16W 1.2K OHM	0	0
R058	0790024R	RES.CHIP 1/16W 100 OHM	0	0	R132	0790037R	RES.CHIP 1/16W 1.0K OHM	0	0
R059	0790024R	RES.CHIP 1/16W 100 OHM	0	0	R133	0790033R	RES.CHIP 1/16W 470 OHM	0	0
R060	0790037R	RES.CHIP 1/16W 1.0K OHM	0	0	R134	0790077R	RES.CHIP 1/16W 1.0M OHM	0	0
R061	0790037R	RES.CHIP 1/16W 1.0K OHM	0	0	R135	0790001R	CHIP RESISTOR RECJUMPER-1-16C16T1608	0	0
R062	0790059R	RES.CHIP 1/16W 47K OHM	0	0	R136	0790033R	RES.CHIP 1/16W 470 OHM	0	0
R063	0790059R	RES.CHIP 1/16W 47K OHM	0	0	R137	0790077R	RES.CHIP 1/16W 1.0M OHM	0	0
R064	0790037R	RES.CHIP 1/16W 1.0K OHM	0	0	R138	0790024R	RES.CHIP 1/16W 100 OHM	0	0
R065	0790037R	RES.CHIP 1/16W 1.0K OHM	0	0	R139	0790046R	RES.CHIP 1/16W 4.7K OHM	0	0
R066	0790037R	RES.CHIP 1/16W 1.0K OHM	0	0	R140	0790046R	RES.CHIP 1/16W 4.7K OHM	0	0
R067	0790037R	RES.CHIP 1/16W 1.0K OHM	0	0	R141	0790051R	RES.CHIP 1/16W 10K OHM	0	0
R069	0790037R	RES.CHIP 1/16W 1.0K OHM	0	0	R142	0790064R	RES.CHIP 1/16W 100K OHM	0	0
R071	0790051R	RES.CHIP 1/16W 10K OHM	0	0	R143	0790028R	RES.CHIP 1/16W 220 OHM	0	0
R072	0790034R	RES.CHIP 1/16W 560 OHM	0	0	R144	0790064R	RES.CHIP 1/16W 100K OHM	0	0
R073	0790024R	RES.CHIP 1/16W 100 OHM	0	0	R146	0790037R	RES.CHIP 1/16W 1.0K OHM	0	0
R074	0790024R	RES.CHIP 1/16W 100 OHM	0	0	R151	0790001R	CHIP RESISTOR RECJUMPER-1-16C16T1608	0	0
R075	0790024R	RES.CHIP 1/16W 100 OHM	0	0	R152	0790001R	CHIP RESISTOR RECJUMPER-1-16C16T1608	0	0
R076	0790024R	RES.CHIP 1/16W 100 OHM	0	0	R154	0790059R	RES.CHIP 1/16W 47K OHM	0	0
R077	0790037R	RES.CHIP 1/16W 1.0K OHM	0	0	R155	0790051R	RES.CHIP 1/16W 10K OHM	0	0
R078	0790037R	RES.CHIP 1/16W 1.0K OHM	0	0	R156	0790059R	RES.CHIP 1/16W 47K OHM	0	0
R079	0790037R	RES.CHIP 1/16W 1.0K OHM	0	0	R157	0790051R	RES.CHIP 1/16W 10K OHM	0	0
R080	0790047R	RES.CHIP 1/16W 5.6K OHM	0	0	R158	0790059R	RES.CHIP 1/16W 47K OHM	0	0
R081	0790037R	RES.CHIP 1/16W 1.0K OHM	0	0	R159	0790051R	RES.CHIP 1/16W 10K OHM	0	0
R082	0790037R	RES.CHIP 1/16W 1.0K OHM	0	0	R160	0790024R	RES.CHIP 1/16W 100 OHM	0	0
R083	0790028R	RES.CHIP 1/16W 220 OHM	0	0	R165	0790024R	RES.CHIP 1/16W 100 OHM	0	0
R084	0790037R	RES.CHIP 1/16W 1.0K OHM	0	0	R166	0790024R	RES.CHIP 1/16W 100 OHM	0	0
R085	0790028R	RES.CHIP 1/16W 220 OHM	0	0	R168	0790024R	RES.CHIP 1/16W 100 OHM	0	0
R086	0790037R	RES.CHIP 1/16W 1.0K OHM	0	0	R170	0790001R	CHIP RESISTOR RECJUMPER-1-16C16T1608	0	0
R087	0790037R	RES.CHIP 1/16W 1.0K OHM	0	0	R171	0790001R	CHIP RESISTOR RECJUMPER-1-16C16T1608	0	0
R088	0790037R	RES.CHIP 1/16W 1.0K OHM	0	0	R174	0790024R	RES.CHIP 1/16W 100 OHM	0	0
R090	0790037R	RES.CHIP 1/16W 1.0K OHM	0	0	R175	0790024R	RES.CHIP 1/16W 100 OHM	0	0
R091	0790037R	RES.CHIP 1/16W 1.0K OHM	0	0	R176	0790059R	RES.CHIP 1/16W 47K OHM	0	0
R092	0790037R	RES.CHIP 1/16W 1.0K OHM	0	0	R177	0790059R	RES.CHIP 1/16W 47K OHM	0	0
R093	0790037R	RES.CHIP 1/16W 1.0K OHM	0	0	R178	0790058R	RES.CHIP 1/16W 39K OHM	0	0
R094	0790051R	RES.CHIP 1/16W 10K OHM	0	0	R179	0790046R	RES.CHIP 1/16W 4.7K OHM	0	0
R095	0790051R	RES.CHIP 1/16W 10K OHM	0	0	R180	0790024R	RES.CHIP 1/16W 100 OHM	0	0
R096	0790037R	RES.CHIP 1/16W 1.0K OHM	0	0	R181	0790044R	RES.CHIP 1/16W 3.3K OHM	0	0
R097	0790037R	RES.CHIP 1/16W 1.0K OHM	0	0	R182	0790047R	RES.CHIP 1/16W 5.6K OHM	0	0
R098	0790024R	RES.CHIP 1/16W 100 OHM	0	0	R183	0790059R	RES.CHIP 1/16W 47K OHM	0	0

PRODUCT SERVICE NOTE: Components marked with a ⚠ have special characteristics important to safety. Before replacing any of these components, read carefully, the PRODUCT SAFETY NOTICE of this Service Manual. Don't degrade the safety of the receiver through improper servicing.

SYMBOL NO.	PART NO.	PART DESCRIPTION	50"	60"	SYMBOL NO.	PART NO.	PART DESCRIPTION	50"	60"
R184	0790051R	RES.CHIP 1/16W 10K OHM	0	0	R292	0790037R	RES.CHIP 1/16W 1.0K OHM	0	0
R185	0790001R	CHIP RESISTOR RECJUMPER-1-16C16T1608	0	0	R293	0790064R	RES.CHIP 1/16W 100K OHM	0	0
R186	0790051R	RES.CHIP 1/16W 10K OHM	0	0	R294	0790047R	RES.CHIP 1/16W 5.6K OHM	0	0
R187	0790057R	RES.CHIP 1/16W 33K OHM	0	0	R295	0790069R	RES.CHIP 1/16W 270K OHM	0	0
R188	0790037R	RES.CHIP 1/16W 1.0K OHM	0	0	R299	0790001R	CHIP RESISTOR RECJUMPER-1-16C16T1608	0	0
R189	0790044R	RES.CHIP 1/16W 3.3K OHM	0	0	R2A0	0790024R	RES.CHIP 1/16W 100 OHM	0	0
R190	0790024R	RES.CHIP 1/16W 100 OHM	0	0	R2A1	0790024R	RES.CHIP 1/16W 100 OHM	0	0
R191	0790059R	RES.CHIP 1/16W 47K OHM	0	0	R2A2	0790024R	RES.CHIP 1/16W 100 OHM	0	0
R192	0790059R	RES.CHIP 1/16W 47K OHM	0	0	R300	0790046R	RES.CHIP 1/16W 4.7K OHM	0	0
R193	0790058R	RES.CHIP 1/16W 39K OHM	0	0	R301	0790041R	RES.CHIP 1/16W 1.8K OHM	0	0
R194	0790046R	RES.CHIP 1/16W 4.7K OHM	0	0	R302	0790042R	RES.CHIP 1/16W 2.2K OHM	0	0
R195	0790024R	RES.CHIP 1/16W 100 OHM	0	0	R305	0790052R	RES.CHIP 1/16W 12K OHM	0	0
R196	0790059R	RES.CHIP 1/16W 47K OHM	0	0	R306	0790059R	RES.CHIP 1/16W 47K OHM	0	0
R197	0790059R	RES.CHIP 1/16W 47K OHM	0	0	R307	0790024R	RES.CHIP 1/16W 100 OHM	0	0
R198	0790046R	RES.CHIP 1/16W 4.7K OHM	0	0	R309	0790047R	RES.CHIP 1/16W 5.6K OHM	0	0
R199	0790024R	RES.CHIP 1/16W 100 OHM	0	0	R310	0790035R	RES.CHIP 1/16W 680 OHM	0	0
R200	0790024R	RES.CHIP 1/16W 100 OHM	0	0	R311	0790059R	RES.CHIP 1/16W 47K OHM	0	0
R201	0790024R	RES.CHIP 1/16W 100 OHM	0	0	R312	0790051R	RES.CHIP 1/16W 10K OHM	0	0
R202	0790051R	RES.CHIP 1/16W 10K OHM	0	0	R313	0790037R	RES.CHIP 1/16W 1.0K OHM	0	0
R203	0790059R	RES.CHIP 1/16W 47K OHM	0	0	R314	0790051R	RES.CHIP 1/16W 10K OHM	0	0
R204	0790051R	RES.CHIP 1/16W 10K OHM	0	0	R320	0790001R	CHIP RESISTOR RECJUMPER-1-16C16T1608	0	0
R205	0790001R	CHIP RESISTOR RECJUMPER-1-16C16T1608	0	0	R321	0790059R	RES.CHIP 1/16W 47K OHM	0	0
R207	0790001R	CHIP RESISTOR RECJUMPER-1-16C16T1608	0	0	R322	0790051R	RES.CHIP 1/16W 10K OHM	0	0
R208	0790043R	RES.CHIP 1/16W 2.7K OHM	0	0	R323	0790037R	RES.CHIP 1/16W 1.0K OHM	0	0
R209	0790043R	RES.CHIP 1/16W 2.7K OHM	0	0	R324	0790051R	RES.CHIP 1/16W 10K OHM	0	0
R210	0790043R	RES.CHIP 1/16W 2.7K OHM	0	0	R326	0790024R	RES.CHIP 1/16W 100 OHM	0	0
R211	0790037R	RES.CHIP 1/16W 1.0K OHM	0	0	R327	0790024R	RES.CHIP 1/16W 100 OHM	0	0
R219	0790024R	RES.CHIP 1/16W 100 OHM	0	0	R328	0790024R	RES.CHIP 1/16W 100 OHM	0	0
R220	0790024R	RES.CHIP 1/16W 100 OHM	0	0	R329	0790024R	RES.CHIP 1/16W 100 OHM	0	0
R224	0790037R	RES.CHIP 1/16W 1.0K OHM	0	0	R330	0790024R	RES.CHIP 1/16W 100 OHM	0	0
R225	0790037R	RES.CHIP 1/16W 1.0K OHM	0	0	R331	0790024R	RES.CHIP 1/16W 100 OHM	0	0
R226	0790037R	RES.CHIP 1/16W 1.0K OHM	0	0	R332	0790024R	RES.CHIP 1/16W 100 OHM	0	0
R227	0790037R	RES.CHIP 1/16W 1.0K OHM	0	0	R333	0790024R	RES.CHIP 1/16W 100 OHM	0	0
R228	0790037R	RES.CHIP 1/16W 1.0K OHM	0	0	R334	0790024R	RES.CHIP 1/16W 100 OHM	0	0
R229	0790037R	RES.CHIP 1/16W 1.0K OHM	0	0	R335	0790024R	RES.CHIP 1/16W 100 OHM	0	0
R234	0790001R	CHIP RESISTOR RECJUMPER-1-16C16T1608	0	0	R336	0790037R	RES.CHIP 1/16W 1.0K OHM	0	0
R235	0790001R	CHIP RESISTOR RECJUMPER-1-16C16T1608	0	0	R337	0790024R	RES.CHIP 1/16W 100 OHM	0	0
R236	0790001R	CHIP RESISTOR RECJUMPER-1-16C16T1608	0	0	R338	0790024R	RES.CHIP 1/16W 100 OHM	0	0
R237	0790001R	CHIP RESISTOR RECJUMPER-1-16C16T1608	0	0	R339	0790037R	RES.CHIP 1/16W 1.0K OHM	0	0
R244	0790024R	RES.CHIP 1/16W 100 OHM	0	0	R340	0790024R	RES.CHIP 1/16W 100 OHM	0	0
R246	0790001R	CHIP RESISTOR RECJUMPER-1-16C16T1608	0	0	R341	0790024R	RES.CHIP 1/16W 100 OHM	0	0
R247	0790042R	RES.CHIP 1/16W 2.2K OHM	0	0	R344	0790037R	RES.CHIP 1/16W 1.0K OHM	0	0
R248	0790024R	RES.CHIP 1/16W 100 OHM	0	0	R345	0790037R	RES.CHIP 1/16W 1.0K OHM	0	0
R250	0790001R	CHIP RESISTOR RECJUMPER-1-16C16T1608	0	0	R346	0790037R	RES.CHIP 1/16W 1.0K OHM	0	0
R251	0790042R	RES.CHIP 1/16W 2.2K OHM	0	0	R347	0790037R	RES.CHIP 1/16W 1.0K OHM	0	0
R252	0790024R	RES.CHIP 1/16W 100 OHM	0	0	R348	0790051R	RES.CHIP 1/16W 10K OHM	0	0
R253	0790024R	RES.CHIP 1/16W 100 OHM	0	0	R349	0790037R	RES.CHIP 1/16W 1.0K OHM	0	0
R254	0790001R	CHIP RESISTOR RECJUMPER-1-16C16T1608	0	0	R350	0790037R	RES.CHIP 1/16W 1.0K OHM	0	0
R256	0790051R	RES.CHIP 1/16W 10K OHM	0	0	R351	0790001R	CHIP RESISTOR RECJUMPER-1-16C16T1608	0	0
R257	0790024R	RES.CHIP 1/16W 100 OHM	0	0	R352	0790001R	CHIP RESISTOR RECJUMPER-1-16C16T1608	0	0
R258	0790024R	RES.CHIP 1/16W 100 OHM	0	0	R353	0790001R	CHIP RESISTOR RECJUMPER-1-16C16T1608	0	0
R259	0790024R	RES.CHIP 1/16W 100 OHM	0	0	R354	0790001R	CHIP RESISTOR RECJUMPER-1-16C16T1608	0	0
R260	0790037R	RES.CHIP 1/16W 1.0K OHM	0	0	R355	0790001R	CHIP RESISTOR RECJUMPER-1-16C16T1608	0	0
R261	0790037R	RES.CHIP 1/16W 1.0K OHM	0	0	R356	0790001R	CHIP RESISTOR RECJUMPER-1-16C16T1608	0	0
R262	0790047R	RES.CHIP 1/16W 5.6K OHM	0	0	R359	0790024R	RES.CHIP 1/16W 100 OHM	0	0
R263	0790051R	RES.CHIP 1/16W 10K OHM	0	0	R360	0790024R	RES.CHIP 1/16W 100 OHM	0	0
R264	0790001R	CHIP RESISTOR RECJUMPER-1-16C16T1608	0	0	R361	0790024R	RES.CHIP 1/16W 100 OHM	0	0
R266	0790024R	RES.CHIP 1/16W 100 OHM	0	0	R362	0790024R	RES.CHIP 1/16W 100 OHM	0	0
R267	0790031R	RES.CHIP 1/16W 330 OHM	0	0	R363	0790037R	RES.CHIP 1/16W 1.0K OHM	0	0
R268	0790031R	RES.CHIP 1/16W 330 OHM	0	0	R364	0790059R	RES.CHIP 1/16W 47K OHM	0	0
R269	0790059R	RES.CHIP 1/16W 47K OHM	0	0	R365	0790059R	RES.CHIP 1/16W 47K OHM	0	0
R270	0790064R	RES.CHIP 1/16W 100K OHM	0	0	R366	0790059R	RES.CHIP 1/16W 47K OHM	0	0
R271	0790012R	RES.CHIP 1/16W 12 OHM	0	0	R367	0790061R	RES.CHIP 1/16W 56K OHM	0	0
R272	0790012R	RES.CHIP 1/16W 12 OHM	0	0	R368	0790061R	RES.CHIP 1/16W 56K OHM	0	0
R273	0790012R	RES.CHIP 1/16W 12 OHM	0	0	R369	0790051R	RES.CHIP 1/16W 10K OHM	0	0
R274	0790012R	RES.CHIP 1/16W 12 OHM	0	0	R370	0790051R	RES.CHIP 1/16W 10K OHM	0	0
R275	0790015R	RES.CHIP 1/16W 22 OHM	0	0	R371	0790024R	RES.CHIP 1/16W 100 OHM	0	0
R276	0790015R	RES.CHIP 1/16W 22 OHM	0	0	R372	0790024R	RES.CHIP 1/16W 100 OHM	0	0
R277	0790021R	RES.CHIP 1/16W 56 OHM	0	0	R373	0790059R	RES.CHIP 1/16W 47K OHM	0	0
R278	0790021R	RES.CHIP 1/16W 56 OHM	0	0	R380	0790001R	CHIP RESISTOR RECJUMPER-1-16C16T1608	0	0
R279	0790037R	RES.CHIP 1/16W 1.0K OHM	0	0	R381	0790001R	CHIP RESISTOR RECJUMPER-1-16C16T1608	0	0
R280	0790037R	RES.CHIP 1/16W 1.0K OHM	0	0	R383	0790037R	RES.CHIP 1/16W 1.0K OHM	0	0
R281	0790037R	RES.CHIP 1/16W 1.0K OHM	0	0	R384	0790061R	RES.CHIP 1/16W 56K OHM	0	0
R282	0790037R	RES.CHIP 1/16W 1.0K OHM	0	0	R386	0790045R	RES.CHIP 1/16W 3.9K OHM	0	0
R283	0790037R	RES.CHIP 1/16W 1.0K OHM	0	0	R390	0790051R	RES.CHIP 1/16W 10K OHM	0	0

PRODUCT SERVICE NOTE: Components marked with a ⚠ have special characteristics important to safety. Before replacing any of these components, read carefully, the PRODUCT SAFETY NOTICE of this Service Manual. Don't degrade the safety of the receiver through improper servicing.

SYMBOL NO.	PART NO.	PART DESCRIPTION	50"	60"	SYMBOL NO.	PART NO.	PART DESCRIPTION	50"	60"
R391	0790037R	RES.CHIP 1/16W 1.0K OHM	0	0	R415	AQ00229R	RES.CHIP 1/16W 22K OHM TAPE	0	
R392	0790042R	RES.CHIP 1/16W 2.2K OHM	0	0	R416	0790059R	RES.CHIP 1/16W 47K OHM	0	0
R394	0790001R	CHIP RESISTOR RECJUMPER-1-16C16T1608	0	0	R418	0790059R	RES.CHIP 1/16W 47K OHM	0	0
R395	0790028R	RES.CHIP 1/16W 220 OHM	0	0	R420	0790037R	RES.CHIP 1/16W 1.0K OHM	0	0
R396	0790028R	RES.CHIP 1/16W 220 OHM	0	0	R422	0790001R	CHIP RESISTOR RECJUMPER-1-16C16T1608	0	0
R398	0790037R	RES.CHIP 1/16W 1.0K OHM	0	0	R423	0790001R	CHIP RESISTOR RECJUMPER-1-16C16T1608	0	0
R399	0790037R	RES.CHIP 1/16W 1.0K OHM	0	0	R425	0790001R	CHIP RESISTOR RECJUMPER-1-16C16T1608	0	0
R3A5	0790037R	RES.CHIP 1/16W 1.0K OHM	0	0	R426	0790001R	CHIP RESISTOR RECJUMPER-1-16C16T1608	0	0
R3A6	0790037R	RES.CHIP 1/16W 1.0K OHM	0	0	R427	0790001R	CHIP RESISTOR RECJUMPER-1-16C16T1608	0	0
R3A7	0790037R	RES.CHIP 1/16W 1.0K OHM	0	0	R428	0790001R	CHIP RESISTOR RECJUMPER-1-16C16T1608	0	0
R3A8	0790037R	RES.CHIP 1/16W 1.0K OHM	0	0	R429	0790001R	CHIP RESISTOR RECJUMPER-1-16C16T1608	0	0
R3A9	0790037R	RES.CHIP 1/16W 1.0K OHM	0	0	R430	0790001R	CHIP RESISTOR RECJUMPER-1-16C16T1608	0	0
R3C0	0790051R	RES.CHIP 1/16W 10K OHM	0	0	R431	0790001R	CHIP RESISTOR RECJUMPER-1-16C16T1608	0	0
R3C1	0790051R	RES.CHIP 1/16W 10K OHM	0	0	R432	0790001R	CHIP RESISTOR RECJUMPER-1-16C16T1608	0	0
R3C2	0790051R	RES.CHIP 1/16W 10K OHM	0	0	R433	0790001R	CHIP RESISTOR RECJUMPER-1-16C16T1608	0	0
R3C3	0790051R	RES.CHIP 1/16W 10K OHM	0	0	R434	0790001R	CHIP RESISTOR RECJUMPER-1-16C16T1608	0	0
R3C4	0790059R	RES.CHIP 1/16W 47K OHM	0	0	R436	0790024R	RES.CHIP 1/16W 100 OHM	0	0
R3C5	0790059R	RES.CHIP 1/16W 47K OHM	0	0	R437	0790024R	RES.CHIP 1/16W 100 OHM	0	0
R3C6	0790051R	RES.CHIP 1/16W 10K OHM	0	0	R438	0790024R	RES.CHIP 1/16W 100 OHM	0	0
R3C7	0790051R	RES.CHIP 1/16W 10K OHM	0	0	R439	0790024R	RES.CHIP 1/16W 100 OHM	0	0
R3C8	0790051R	RES.CHIP 1/16W 10K OHM	0	0	R491	0790001R	CHIP RESISTOR RECJUMPER-1-16C16T1608	0	0
R3C9	0790051R	RES.CHIP 1/16W 10K OHM	0	0	R496	0790001R	CHIP RESISTOR RECJUMPER-1-16C16T1608	0	0
R3E0	0790055R	RES.CHIP 1/16W 22K OHM	0	0	R497	0790001R	CHIP RESISTOR RECJUMPER-1-16C16T1608	0	0
R3E1	0790055R	RES.CHIP 1/16W 22K OHM	0	0	R578	0790051R	RES.CHIP 1/16W 10K OHM	0	0
R3E4	0790001R	CHIP RESISTOR RECJUMPER-1-16C16T1608	0	0	R579	0790051R	RES.CHIP 1/16W 10K OHM	0	0
R3E5	0790001R	CHIP RESISTOR RECJUMPER-1-16C16T1608	0	0	R581	0790051R	RES.CHIP 1/16W 10K OHM	0	0
R3E7	0790037R	RES.CHIP 1/16W 1.0K OHM	0	0	R582	0790059R	RES.CHIP 1/16W 47K OHM	0	0
R3F0	0790051R	RES.CHIP 1/16W 10K OHM	0	0	R584	0790028R	RES.CHIP 1/16W 220 OHM	0	0
R3F1	0790037R	RES.CHIP 1/16W 1.0K OHM	0	0	R585	0790053R	RES.CHIP 1/16W 15K OHM	0	0
R3F2	0790042R	RES.CHIP 1/16W 2.2K OHM	0	0	R586	0790024R	RES.CHIP 1/16W 100 OHM	0	0
R3F8	0790028R	RES.CHIP 1/16W 220 OHM	0	0	R587	0790024R	RES.CHIP 1/16W 100 OHM	0	0
R3F9	0790028R	RES.CHIP 1/16W 220 OHM	0	0	R588	0790001R	CHIP RESISTOR RECJUMPER-1-16C16T1608	0	0
R3H0	0790001R	CHIP RESISTOR RECJUMPER-1-16C16T1608	0	0	R589	0790051R	RES.CHIP 1/16W 10K OHM	0	0
R3H1	0790037R	RES.CHIP 1/16W 1.0K OHM	0	0	R590	0790059R	RES.CHIP 1/16W 47K OHM	0	0
R3H2	0790037R	RES.CHIP 1/16W 1.0K OHM	0	0	R591	0790059R	RES.CHIP 1/16W 47K OHM	0	0
R3H3	0790024R	RES.CHIP 1/16W 100 OHM	0	0	R593	0790056R	RES.CHIP 1/16W 27K OHM	0	0
R3H4	0790051R	RES.CHIP 1/16W 10K OHM	0	0	R594	0790051R	RES.CHIP 1/16W 10K OHM	0	0
R3H5	0790059R	RES.CHIP 1/16W 47K OHM	0	0	R595	0790053R	RES.CHIP 1/16W 15K OHM	0	0
R3H6	0790055R	RES.CHIP 1/16W 22K OHM	0	0	R596	0790024R	RES.CHIP 1/16W 100 OHM	0	0
R3H7	0790001R	CHIP RESISTOR RECJUMPER-1-16C16T1608	0	0	R597	0790033R	RES.CHIP 1/16W 470 OHM	0	0
R3H8	0790058R	RES.CHIP 1/16W 39K OHM	0	0	R598	0790033R	RES.CHIP 1/16W 470 OHM	0	0
R3J0	0790001R	CHIP RESISTOR RECJUMPER-1-16C16T1608	0	0	R599	0790037R	RES.CHIP 1/16W 1.0K OHM	0	0
R3J1	0790001R	CHIP RESISTOR RECJUMPER-1-16C16T1608	0	0	R5A1	0790037R	RES.CHIP 1/16W 1.0K OHM	0	0
R3K1	0790001R	CHIP RESISTOR RECJUMPER-1-16C16T1608	0	0	R5A3	0790037R	RES.CHIP 1/16W 1.0K OHM	0	0
R3K2	0790001R	CHIP RESISTOR RECJUMPER-1-16C16T1608	0	0	R5A4	0790055R	RES.CHIP 1/16W 22K OHM	0	0
R3L5	0790001R	CHIP RESISTOR RECJUMPER-1-16C16T1608	0	0	R5A5	0790037R	RES.CHIP 1/16W 1.0K OHM	0	0
R3L6	0790037R	RES.CHIP 1/16W 1.0K OHM	0	0	R5A6	0790059R	RES.CHIP 1/16W 47K OHM	0	0
R3M1	0790001R	CHIP RESISTOR RECJUMPER-1-16C16T1608	0	0	R5A7	0790051R	RES.CHIP 1/16W 10K OHM	0	0
R3M9	0790001R	CHIP RESISTOR RECJUMPER-1-16C16T1608	0	0	R5K9	0790051R	RES.CHIP 1/16W 10K OHM	0	0
R3N0	0790001R	CHIP RESISTOR RECJUMPER-1-16C16T1608	0	0	R5L0	0790037R	RES.CHIP 1/16W 1.0K OHM	0	0
R3N1	0790001R	CHIP RESISTOR RECJUMPER-1-16C16T1608	0	0	R5L1	0790037R	RES.CHIP 1/16W 1.0K OHM	0	0
R3N7	0790001R	CHIP RESISTOR RECJUMPER-1-16C16T1608	0	0	R5L3	0790037R	RES.CHIP 1/16W 1.0K OHM	0	0
R3P1	0790001R	CHIP RESISTOR RECJUMPER-1-16C16T1608	0	0	R5L4	0790037R	RES.CHIP 1/16W 1.0K OHM	0	0
R3P2	0790001R	CHIP RESISTOR RECJUMPER-1-16C16T1608	0	0	R5N9	0790001R	CHIP RESISTOR RECJUMPER-1-16C16T1608	0	0
R3P4	0790001R	CHIP RESISTOR RECJUMPER-1-16C16T1608	0	0	R5P1	0790001R	CHIP RESISTOR RECJUMPER-1-16C16T1608	0	0
R3Q4	0790001R	CHIP RESISTOR RECJUMPER-1-16C16T1608	0	0	R5P2	0790055R	RES.CHIP 1/16W 22K OHM	0	0
R3Q5	0790001R	CHIP RESISTOR RECJUMPER-1-16C16T1608	0	0	R602	0790037R	RES.CHIP 1/16W 1.0K OHM	0	0
R3R2	0790001R	CHIP RESISTOR RECJUMPER-1-16C16T1608	0	0	R605	0790028R	RES.CHIP 1/16W 220 OHM	0	0
R3R3	0790001R	CHIP RESISTOR RECJUMPER-1-16C16T1608	0	0	R608	0790037R	RES.CHIP 1/16W 1.0K OHM	0	0
R3R4	0790001R	CHIP RESISTOR RECJUMPER-1-16C16T1608	0	0	R609	0790024R	RES.CHIP 1/16W 100 OHM	0	
R401	0790051R	RES.CHIP 1/16W 10K OHM	0	0	R610	0790024R	RES.CHIP 1/16W 100 OHM	0	
R402	0790051R	RES.CHIP 1/16W 10K OHM	0	0	R611	0790024R	RES.CHIP 1/16W 100 OHM	0	
R404	AQ00241R	RES.CHIP 1/16W 56K OHM TAPE		0	R612	0790024R	RES.CHIP 1/16W 100 OHM	0	0
R404	AQ00241R	RES.CHIP 1/16W 56K OHM TAPE	0		R614	0790024R	RES.CHIP 1/16W 100 OHM	0	0
R405	AQ00218R	RES.CHIP 1/16W 8.2K OHM TAPE		0	R615	0790024R	RES.CHIP 1/16W 100 OHM	0	0
R405	AQ00218R	RES.CHIP 1/16W 8.2K OHM TAPE	0		R616	0790024R	RES.CHIP 1/16W 100 OHM	0	0
R406	AQ00229R	RES.CHIP 1/16W 22K OHM TAPE		0	R617	0790024R	RES.CHIP 1/16W 100 OHM	0	0
R406	AQ00229R	RES.CHIP 1/16W 22K OHM TAPE	0		R618	0790024R	RES.CHIP 1/16W 100 OHM	0	0
R407	0790059R	RES.CHIP 1/16W 47K OHM	0	0	R619	0790024R	RES.CHIP 1/16W 100 OHM	0	0
R409	0790059R	RES.CHIP 1/16W 47K OHM	0	0	R620	0790024R	RES.CHIP 1/16W 100 OHM	0	0
R410	0790051R	RES.CHIP 1/16W 10K OHM	0	0	R621	0790024R	RES.CHIP 1/16W 100 OHM	0	0
R411	0790051R	RES.CHIP 1/16W 10K OHM	0	0	R622	0790024R	RES.CHIP 1/16W 100 OHM	0	
R413	AQ00234R	RES.CHIP 1/16W 33K OHM TAPE	0	0	R623	0790024R	RES.CHIP 1/16W 100 OHM	0	0
R414	AQ00234R	RES.CHIP 1/16W 33K OHM TAPE	0	0	R624	0790024R	RES.CHIP 1/16W 100 OHM	0	0
R415	AQ00229R	RES.CHIP 1/16W 22K OHM TAPE		0	R625	0790051R	RES.CHIP 1/16W 10K OHM	0	0

PRODUCT SERVICE NOTE: Components marked with a ⚠ have special characteristics important to safety. Before replacing any of these components, read carefully, the PRODUCT SAFETY NOTICE of this Service Manual. Don't degrade the safety of the receiver through improper servicing.

SYMBOL NO.	PART NO.	PART DESCRIPTION	50"	60"	SYMBOL NO.	PART NO.	PART DESCRIPTION	50"	60"
R626	0790051R	RES.CHIP 1/16W 10K OHM	0	0	R700	0790001R	CHIP RESISTOR RECJUMPER-1-16C16T1608		0
R627	0790024R	RES.CHIP 1/16W 100 OHM	0	0	R701	0790001R	CHIP RESISTOR RECJUMPER-1-16C16T1608		0
R628	0790024R	RES.CHIP 1/16W 100 OHM	0	0	R702	0790001R	CHIP RESISTOR RECJUMPER-1-16C16T1608		0
R629	0790037R	RES.CHIP 1/16W 1.0K OHM	0	0	R703	0790001R	CHIP RESISTOR RECJUMPER-1-16C16T1608	0	0
R630	0790037R	RES.CHIP 1/16W 1.0K OHM	0	0	R704	0790001R	CHIP RESISTOR RECJUMPER-1-16C16T1608	0	0
R631	0790024R	RES.CHIP 1/16W 100 OHM	0	0	R705	0790001R	CHIP RESISTOR RECJUMPER-1-16C16T1608		0
R632	0790024R	RES.CHIP 1/16W 100 OHM	0	0	R705	0790017R	RES.CHIP 1/16W 33 OHM	0	
R633	0790024R	RES.CHIP 1/16W 100 OHM	0	0	R706	0790001R	CHIP RESISTOR RECJUMPER-1-16C16T1608		0
R634	0790024R	RES.CHIP 1/16W 100 OHM	0	0	R706	0790017R	RES.CHIP 1/16W 33 OHM	0	
R635	0790051R	RES.CHIP 1/16W 10K OHM		0	R707	0790001R	CHIP RESISTOR RECJUMPER-1-16C16T1608	0	0
R635	0790046R	RES.CHIP 1/16W 4.7K OHM	0		R708	0790001R	CHIP RESISTOR RECJUMPER-1-16C16T1608		0
R636	0790051R	RES.CHIP 1/16W 10K OHM		0	R709	0790001R	CHIP RESISTOR RECJUMPER-1-16C16T1608	0	0
R636	0790046R	RES.CHIP 1/16W 4.7K OHM	0		R70A	0790037R	RES.CHIP 1/16W 1.0K OHM	0	
R637	0790046R	RES.CHIP 1/16W 4.7K OHM		0	R70B	0790037R	RES.CHIP 1/16W 1.0K OHM	0	
R637	0790051R	RES.CHIP 1/16W 10K OHM	0		R70C	0790037R	RES.CHIP 1/16W 1.0K OHM	0	
R638	0790046R	RES.CHIP 1/16W 4.7K OHM		0	R710	0790001R	CHIP RESISTOR RECJUMPER-1-16C16T1608	0	0
R638	0790051R	RES.CHIP 1/16W 10K OHM	0		R711	0790024R	RES.CHIP 1/16W 100 OHM		0
R639	0790024R	RES.CHIP 1/16W 100 OHM	0	0	R711	0790001R	CHIP RESISTOR RECJUMPER-1-16C16T1608	0	
R640	0790024R	RES.CHIP 1/16W 100 OHM	0	0	R712	0790024R	RES.CHIP 1/16W 100 OHM		0
R641	0790001R	CHIP RESISTOR RECJUMPER-1-16C16T1608	0	0	R713	0790024R	RES.CHIP 1/16W 100 OHM		0
R643	0790024R	RES.CHIP 1/16W 100 OHM	0	0	R714	0790024R	RES.CHIP 1/16W 100 OHM		0
R644	0790001R	CHIP RESISTOR RECJUMPER-1-16C16T1608	0	0	R715	0790024R	RES.CHIP 1/16W 100 OHM		0
R645	0790051R	RES.CHIP 1/16W 10K OHM	0	0	R716	0790017R	RES.CHIP 1/16W 33 OHM		0
R646	0790031R	RES.CHIP 1/16W 330 OHM	0	0	R716	0790001R	CHIP RESISTOR RECJUMPER-1-16C16T1608	0	
R648	0790024R	RES.CHIP 1/16W 100 OHM	0	0	R717	0790017R	RES.CHIP 1/16W 33 OHM		0
R649	0790037R	RES.CHIP 1/16W 1.0K OHM	0	0	R718	0790001R	CHIP RESISTOR RECJUMPER-1-16C16T1608		0
R650	0790051R	RES.CHIP 1/16W 10K OHM	0	0	R719	0790001R	CHIP RESISTOR RECJUMPER-1-16C16T1608		0
R654	0790024R	RES.CHIP 1/16W 100 OHM	0	0	R719	AQ00337R	RES.CHIP 1/16W 33 OHM TAPE	0	
R655	0790024R	RES.CHIP 1/16W 100 OHM	0	0	R719	AQ00337R	RES.CHIP 1/16W 33 OHM TAPE		0
R657	0790024R	RES.CHIP 1/16W 100 OHM	0	0	R720	0790001R	CHIP RESISTOR RECJUMPER-1-16C16T1608		0
R658	0790024R	RES.CHIP 1/16W 100 OHM	0	0	R720	AQ00337R	RES.CHIP 1/16W 33 OHM TAPE	0	
R659	0790001R	CHIP RESISTOR RECJUMPER-1-16C16T1608	0	0	R721	0790037R	RES.CHIP 1/16W 1.0K OHM	0	0
R660	0790051R	RES.CHIP 1/16W 10K OHM	0	0	R721	AQ00337R	RES.CHIP 1/16W 33 OHM TAPE	0	
R661	0790059R	RES.CHIP 1/16W 47K OHM	0	0	R722	AQ00337R	RES.CHIP 1/16W 33 OHM TAPE	0	
R662	0790051R	RES.CHIP 1/16W 10K OHM	0	0	R723	AQ00337R	RES.CHIP 1/16W 33 OHM TAPE	0	
R665	0790001R	CHIP RESISTOR RECJUMPER-1-16C16T1608	0	0					
R666	0790001R	CHIP RESISTOR RECJUMPER-1-16C16T1608	0	0	R724	AQ00337R	RES.CHIP 1/16W 33 OHM TAPE	0	
R667	0790001R	CHIP RESISTOR RECJUMPER-1-16C16T1608	0	0	R725	0790001R	CHIP RESISTOR RECJUMPER-1-16C16T1608		0
R668	0790001R	CHIP RESISTOR RECJUMPER-1-16C16T1608	0	0	R725	0790055R	RES.CHIP 1/16W 22K OHM	0	
R669	0790001R	CHIP RESISTOR RECJUMPER-1-16C16T1608	0	0	R726	0790055R	RES.CHIP 1/16W 22K OHM	0	
R670	0790001R	CHIP RESISTOR RECJUMPER-1-16C16T1608	0	0	R729	0790001R	CHIP RESISTOR RECJUMPER-1-16C16T1608		0
R673	0790024R	RES.CHIP 1/16W 100 OHM	0	0	R729	0790017R	RES.CHIP 1/16W 33 OHM	0	
R674	0790024R	RES.CHIP 1/16W 100 OHM	0	0	R730	0790001R	CHIP RESISTOR RECJUMPER-1-16C16T1608		0
R675	0790024R	RES.CHIP 1/16W 100 OHM	0	0	R730	0790017R	RES.CHIP 1/16W 33 OHM	0	
R676	0790059R	RES.CHIP 1/16W 47K OHM	0	0	R731	AQ00337R	RES.CHIP 1/16W 33 OHM TAPE		0
R680	0790001R	CHIP RESISTOR RECJUMPER-1-16C16T1608	0	0	R731	0790001R	CHIP RESISTOR RECJUMPER-1-16C16T1608	0	
R682	0790051R	RES.CHIP 1/16W 10K OHM	0	0	R732	AQ00337R	RES.CHIP 1/16W 33 OHM TAPE		0
R683	0790051R	RES.CHIP 1/16W 10K OHM	0	0	R732	0790017R	RES.CHIP 1/16W 33 OHM	0	
R692	0790024R	RES.CHIP 1/16W 100 OHM	0	0	R733	AQ00337R	RES.CHIP 1/16W 33 OHM TAPE		0
R693	0790024R	RES.CHIP 1/16W 100 OHM	0	0	R733	0790001R	CHIP RESISTOR RECJUMPER-1-16C16T1608	0	
R694	0790051R	RES.CHIP 1/16W 10K OHM	0	0	R734	AQ00337R	RES.CHIP 1/16W 33 OHM TAPE		0
R695	0790051R	RES.CHIP 1/16W 10K OHM	0	0	R734	0790001R	CHIP RESISTOR RECJUMPER-1-16C16T1608	0	
R697	0790001R	CHIP RESISTOR RECJUMPER-1-16C16T1608	0	0	R735	AQ00337R	RES.CHIP 1/16W 33 OHM TAPE		0
R698	0790001R	CHIP RESISTOR RECJUMPER-1-16C16T1608	0	0	R735	0790017R	RES.CHIP 1/16W 33 OHM	0	
R6A4	0790051R	RES.CHIP 1/16W 10K OHM	0	0	R736	AQ00337R	RES.CHIP 1/16W 33 OHM TAPE		0
R6A5	0790051R	RES.CHIP 1/16W 10K OHM	0	0	R736	0790001R	CHIP RESISTOR RECJUMPER-1-16C16T1608	0	
R6A6	0790051R	RES.CHIP 1/16W 10K OHM	0	0	R737	0790024R	RES.CHIP 1/16W 100 OHM	0	
R6A7	0790051R	RES.CHIP 1/16W 10K OHM	0	0	R738	0790024R	RES.CHIP 1/16W 100 OHM	0	
R6A8	0790024R	RES.CHIP 1/16W 100 OHM	0	0	R739	0790024R	RES.CHIP 1/16W 100 OHM	0	
R6A9	0790001R	CHIP RESISTOR RECJUMPER-1-16C16T1608	0		R740	0790024R	RES.CHIP 1/16W 100 OHM	0	
R6C0	0790024R	RES.CHIP 1/16W 100 OHM	0	0	R741	0790024R	RES.CHIP 1/16W 100 OHM	0	
R6C1	0790001R	CHIP RESISTOR RECJUMPER-1-16C16T1608	0		R746	0790017R	RES.CHIP 1/16W 33 OHM	0	
R6C2	0790001R	CHIP RESISTOR RECJUMPER-1-16C16T1608	0		R747	AQ00337R	RES.CHIP 1/16W 33 OHM TAPE	0	
R6C3	0790001R	CHIP RESISTOR RECJUMPER-1-16C16T1608	0	0	R749	0790017R	RES.CHIP 1/16W 33 OHM	0	
R6C4	0790001R	CHIP RESISTOR RECJUMPER-1-16C16T1608	0	0	R750	0790024R	RES.CHIP 1/16W 100 OHM		0
R6C5	0790001R	CHIP RESISTOR RECJUMPER-1-16C16T1608	0	0	R750	0790001R	CHIP RESISTOR RECJUMPER-1-16C16T1608	0	
R6C6	0790001R	CHIP RESISTOR RECJUMPER-1-16C16T1608	0	0	R751	0790001R	CHIP RESISTOR RECJUMPER-1-16C16T1608	0	
R6C7	0790001R	CHIP RESISTOR RECJUMPER-1-16C16T1608	0	0	R752	0790001R	CHIP RESISTOR RECJUMPER-1-16C16T1608	0	
R6C8	0790001R	CHIP RESISTOR RECJUMPER-1-16C16T1608	0	0	R753	0790001R	CHIP RESISTOR RECJUMPER-1-16C16T1608	0	
R6D1	0790024R	RES.CHIP 1/16W 100 OHM	0	0	R754	0790001R	CHIP RESISTOR RECJUMPER-1-16C16T1608	0	
R6D2	0790024R	RES.CHIP 1/16W 100 OHM	0	0	R755	0790001R	CHIP RESISTOR RECJUMPER-1-16C16T1608	0	
R6D4	0790024R	RES.CHIP 1/16W 100 OHM		0	R757	0790001R	CHIP RESISTOR RECJUMPER-1-16C16T1608	0	
R6D5	0790024R	RES.CHIP 1/16W 100 OHM		0	R758	0790064R	RES.CHIP 1/16W 100K OHM		0
R6D6	0790024R	RES.CHIP 1/16W 100 OHM		0	R758	0790011R	RES.CHIP 1/16W 10 OHM	0	
R6D7	0790024R	RES.CHIP 1/16W 100 OHM		0	R759	0790064R	RES.CHIP 1/16W 100K OHM		0

PRODUCT SERVICE NOTE: Components marked with a ⚠ have special characteristics important to safety. Before replacing any of these components, read carefully, the PRODUCT SAFETY NOTICE of this Service Manual. Don't degrade the safety of the receiver through improper servicing.

SYMBOL NO.	PART NO.	PART DESCRIPTION	50"	60"	SYMBOL NO.	PART NO.	PART DESCRIPTION	50"	60"
R759	0790011R	RES.CHIP 1/16W 10 OHM	0		R7A5	0790024R	RES.CHIP 1/16W 100 OHM		0
R760	0790064R	RES.CHIP 1/16W 100K OHM		0	R7A7	AQ00331R	RES.CHIP 1/16W 10 OHM TAPE		0
R760	0790011R	RES.CHIP 1/16W 10 OHM	0		R7A8	AQ00331R	RES.CHIP 1/16W 10 OHM TAPE		0
R761	0790064R	RES.CHIP 1/16W 100K OHM		0	R7A9	AQ00331R	RES.CHIP 1/16W 10 OHM TAPE		0
R761	0790011R	RES.CHIP 1/16W 10 OHM	0		R7C0	0790024R	RES.CHIP 1/16W 100 OHM		0
R762	0790064R	RES.CHIP 1/16W 100K OHM		0	R7C1	0790059R	RES.CHIP 1/16W 47K OHM		0
R762	0790024R	RES.CHIP 1/16W 100 OHM	0		R7C1	0790001R	CHIP RESISTOR RECJUMPER-1-16C16T1608	0	
R763	0790064R	RES.CHIP 1/16W 100K OHM		0	R7C2	0790053R	RES.CHIP 1/16W 15K OHM		0
R763	0790001R	CHIP RESISTOR RECJUMPER-1-16C16T1608	0		R7C2	0790001R	CHIP RESISTOR RECJUMPER-1-16C16T1608	0	
R764	0790064R	RES.CHIP 1/16W 100K OHM		0	R7C3	0790057R	RES.CHIP 1/16W 33K OHM		0
R765	0790024R	RES.CHIP 1/16W 100 OHM	0		R7C3	0790001R	CHIP RESISTOR RECJUMPER-1-16C16T1608	0	
R766	0790001R	CHIP RESISTOR RECJUMPER-1-16C16T1608		0	R7C4	0790055R	RES.CHIP 1/16W 22K OHM		0
R766	0790001R	CHIP RESISTOR RECJUMPER-1-16C16T1608	0		R7C4	0790011R	RES.CHIP 1/16W 10 OHM	0	
R767	0790001R	CHIP RESISTOR RECJUMPER-1-16C16T1608		0	R7C5	0790001R	CHIP RESISTOR RECJUMPER-1-16C16T1608		0
R768	AQ00228R	RES.CHIP 1/16W 20K OHM TAPE		0	R7C5	0790011R	RES.CHIP 1/16W 10 OHM	0	
R768	0790001R	CHIP RESISTOR RECJUMPER-1-16C16T1608	0		R7C6	0790001R	CHIP RESISTOR RECJUMPER-1-16C16T1608		0
R769	0790001R	CHIP RESISTOR RECJUMPER-1-16C16T1608	0		R7C6	0790001R	CHIP RESISTOR RECJUMPER-1-16C16T1608	0	
R770	0790051R	RES.CHIP 1/16W 10K OHM		0	R7C7	0790024R	RES.CHIP 1/16W 100 OHM		0
R771	0790046R	RES.CHIP 1/16W 4.7K OHM	0		R7C8	AQ00337R	RES.CHIP 1/16W 33 OHM TAPE	0	
R772	AQ00164R	RES.CHIP 1/16W 75 OHM TAPE		0	R7C9	0790024R	RES.CHIP 1/16W 100 OHM		0
R772	0790046R	RES.CHIP 1/16W 4.7K OHM	0		R7C9	0790001R	CHIP RESISTOR RECJUMPER-1-16C16T1608	0	
R773	0790011R	RES.CHIP 1/16W 10 OHM	0		R7E1	0790011R	RES.CHIP 1/16W 10 OHM		0
R774	0790019R	RES.CHIP 1/16W 47 OHM		0	R7E2	0790001R	CHIP RESISTOR RECJUMPER-1-16C16T1608		0
R774	AQ00337R	RES.CHIP 1/16W 33 OHM TAPE	0		R7E2	0790011R	RES.CHIP 1/16W 10 OHM	0	
R775	0790001R	CHIP RESISTOR RECJUMPER-1-16C16T1608		0	R7E3	0790011R	RES.CHIP 1/16W 10 OHM		0
R775	AQ00337R	RES.CHIP 1/16W 33 OHM TAPE	0		R7E3	0790011R	RES.CHIP 1/16W 10 OHM	0	
R776	0790001R	CHIP RESISTOR RECJUMPER-1-16C16T1608		0	R7E4	0790024R	RES.CHIP 1/16W 100 OHM		0
R776	AQ00337R	RES.CHIP 1/16W 33 OHM TAPE	0		R7E4	0790011R	RES.CHIP 1/16W 10 OHM	0	
R777	0790037R	RES.CHIP 1/16W 1.0K OHM		0	R7E5	0790024R	RES.CHIP 1/16W 100 OHM		0
R777	AQ00337R	RES.CHIP 1/16W 33 OHM TAPE	0		R7E6	0790001R	CHIP RESISTOR RECJUMPER-1-16C16T1608	0	
R778	AQ00339R	RES.CHIP 1/16W 47 OHM TAPE		0	R7E8	0790001R	CHIP RESISTOR RECJUMPER-1-16C16T1608	0	
R778	AQ00337R	RES.CHIP 1/16W 33 OHM TAPE	0		R7F0	0790001R	CHIP RESISTOR RECJUMPER-1-16C16T1608		0
R779	AQ00339R	RES.CHIP 1/16W 47 OHM TAPE		0	R7F1	0790001R	CHIP RESISTOR RECJUMPER-1-16C16T1608		0
R779	AQ00337R	RES.CHIP 1/16W 33 OHM TAPE	0		R7F1	0790011R	RES.CHIP 1/16W 10 OHM	0	
R780	AQ00339R	RES.CHIP 1/16W 47 OHM TAPE		0	R7F2	0790011R	RES.CHIP 1/16W 10 OHM	0	
R780	AQ00337R	RES.CHIP 1/16W 33 OHM TAPE	0		R7F3	AQ00339R	RES.CHIP 1/16W 47 OHM TAPE		0
R781	AQ00339R	RES.CHIP 1/16W 47 OHM TAPE		0	R7F3	0790011R	RES.CHIP 1/16W 10 OHM	0	
R781	AQ00337R	RES.CHIP 1/16W 33 OHM TAPE	0		R7F4	AQ00202R	RES.CHIP 1/16W 2.0K OHM TAPE		0
R782	AQ00339R	RES.CHIP 1/16W 47 OHM TAPE		0	R7F4	0790011R	RES.CHIP 1/16W 10 OHM	0	
R782	AQ00337R	RES.CHIP 1/16W 33 OHM TAPE	0		R7F5	0790024R	RES.CHIP 1/16W 100 OHM		0
R783	AQ00339R	RES.CHIP 1/16W 47 OHM TAPE		0	R7F5	0790011R	RES.CHIP 1/16W 10 OHM	0	
R784	0790001R	CHIP RESISTOR RECJUMPER-1-16C16T1608		0	R7F6	0790011R	RES.CHIP 1/16W 10 OHM	0	
R784	0790011R	RES.CHIP 1/16W 10 OHM	0		R7F7	AQ00331R	RES.CHIP 1/16W 10 OHM TAPE		0
R785	0790001R	CHIP RESISTOR RECJUMPER-1-16C16T1608		0	R7F7	0790011R	RES.CHIP 1/16W 10 OHM	0	
R785	0790011R	RES.CHIP 1/16W 10 OHM	0		R7F8	AQ00331R	RES.CHIP 1/16W 10 OHM TAPE		0
R786	0790037R	RES.CHIP 1/16W 1.0K OHM		0	R7F8	0790044R	RES.CHIP 1/16W 3.3K OHM	0	
R786	0790011R	RES.CHIP 1/16W 10 OHM	0		R7F9	AQ00331R	RES.CHIP 1/16W 10 OHM TAPE		0
R787	AQ00339R	RES.CHIP 1/16W 47 OHM TAPE		0	R7F9	0790002R	RES.CHIP 1/16W 2.2 OHM	0	
R787	0790011R	RES.CHIP 1/16W 10 OHM	0		R7G0	0790024R	RES.CHIP 1/16W 100 OHM		0
R788	AQ00339R	RES.CHIP 1/16W 47 OHM TAPE		0	R7G1	0790059R	RES.CHIP 1/16W 47K OHM		0
R788	0790011R	RES.CHIP 1/16W 10 OHM	0		R7G1	0790011R	RES.CHIP 1/16W 10 OHM	0	
R789	AQ00339R	RES.CHIP 1/16W 47 OHM TAPE		0	R7G2	0790044R	RES.CHIP 1/16W 3.3K OHM		0
R789	0790011R	RES.CHIP 1/16W 10 OHM	0		R7G3	0790024R	RES.CHIP 1/16W 100 OHM		0
R790	AQ00339R	RES.CHIP 1/16W 47 OHM TAPE		0	R7G3	0790002R	RES.CHIP 1/16W 2.2 OHM	0	
R791	AQ00339R	RES.CHIP 1/16W 47 OHM TAPE		0	R7G4	AQ00189R	RES.CHIP 1/16W 680 OHM TAPE		0
R792	AQ00339R	RES.CHIP 1/16W 47 OHM TAPE		0	R7G4	0790011R	RES.CHIP 1/16W 10 OHM	0	
R792	0790001R	CHIP RESISTOR RECJUMPER-1-16C16T1608	0		R7G5	0790051R	RES.CHIP 1/16W 10K OHM		0
R793	0790001R	CHIP RESISTOR RECJUMPER-1-16C16T1608		0	R7G5	0790011R	RES.CHIP 1/16W 10 OHM	0	
R793	0790011R	RES.CHIP 1/16W 10 OHM	0		R7G6	0790051R	RES.CHIP 1/16W 10K OHM		0
R794	0790001R	CHIP RESISTOR RECJUMPER-1-16C16T1608		0	R7G6	0790044R	RES.CHIP 1/16W 3.3K OHM	0	
R794	0790011R	RES.CHIP 1/16W 10 OHM	0		R7G7	0790044R	RES.CHIP 1/16W 3.3K OHM		0
R795	0790037R	RES.CHIP 1/16W 1.0K OHM		0	R7G9	0790051R	RES.CHIP 1/16W 10K OHM	0	
R795	0790011R	RES.CHIP 1/16W 10 OHM	0		R7H0	0790011R	RES.CHIP 1/16W 10 OHM		0
R796	AQ00339R	RES.CHIP 1/16W 47 OHM TAPE		0	R7H1	0790011R	RES.CHIP 1/16W 10 OHM		0
R796	0790011R	RES.CHIP 1/16W 10 OHM	0		R7H1	0790051R	RES.CHIP 1/16W 10K OHM	0	
R797	AQ00339R	RES.CHIP 1/16W 47 OHM TAPE		0	R7H2	0790001R	CHIP RESISTOR RECJUMPER-1-16C16T1608	0	
R797	0790011R	RES.CHIP 1/16W 10 OHM	0		R7H3	0790001R	CHIP RESISTOR RECJUMPER-1-16C16T1608	0	
R798	AQ00339R	RES.CHIP 1/16W 47 OHM TAPE		0	R7H4	0790001R	CHIP RESISTOR RECJUMPER-1-16C16T1608	0	
R798	0790011R	RES.CHIP 1/16W 10 OHM	0		R7H5	0790001R	CHIP RESISTOR RECJUMPER-1-16C16T1608	0	
R799	AQ00339R	RES.CHIP 1/16W 47 OHM TAPE		0	R7H6	0790011R	RES.CHIP 1/16W 10 OHM	0	
R7A0	0790001R	CHIP RESISTOR RECJUMPER-1-16C16T1608		0	R7H7	0790011R	RES.CHIP 1/16W 10 OHM	0	
R7A1	0790001R	CHIP RESISTOR RECJUMPER-1-16C16T1608		0	R7H8	0790011R	RES.CHIP 1/16W 10 OHM	0	
R7A3	AQ00339R	RES.CHIP 1/16W 47 OHM TAPE		0	R7J3	0790001R	CHIP RESISTOR RECJUMPER-1-16C16T1608	0	
R7A3	0790001R	CHIP RESISTOR RECJUMPER-1-16C16T1608	0		R7J4	0790001R	CHIP RESISTOR RECJUMPER-1-16C16T1608	0	
R7A4	AQ00202R	RES.CHIP 1/16W 2.0K OHM TAPE		0	R7J5	0790011R	RES.CHIP 1/16W 10 OHM	0	

PRODUCT SERVICE NOTE: Components marked with a ⚠ have special characteristics important to safety. Before replacing any of these components, read carefully, the PRODUCT SAFETY NOTICE of this Service Manual. Don't degrade the safety of the receiver through improper servicing.

SYMBOL NO.	PART NO.	PART DESCRIPTION	50"	60"	SYMBOL NO.	PART NO.	PART DESCRIPTION	50"	60"
R7J6	0790011R	RES.CHIP 1/16W 10 OHM	0		R7R4	0790011R	RES.CHIP 1/16W 10 OHM	0	
R7J7	0790011R	RES.CHIP 1/16W 10 OHM	0		R7R7	0790001R	CHIP RESISTOR RECJUMPER-1-16C16T1608	0	
R7J8	0790011R	RES.CHIP 1/16W 10 OHM	0		R7R9	0790001R	CHIP RESISTOR RECJUMPER-1-16C16T1608	0	
R7J9	0790011R	RES.CHIP 1/16W 10 OHM	0		R7S0	AQ00339R	RES.CHIP 1/16W 47 OHM TAPE		0
R7K0	0790001R	CHIP RESISTOR RECJUMPER-1-16C16T1608		0	R7S1	AQ00339R	RES.CHIP 1/16W 47 OHM TAPE		0
R7K1	0790011R	RES.CHIP 1/16W 10 OHM	0		R7S1	0790011R	RES.CHIP 1/16W 10 OHM	0	
R7K2	AQ00339R	RES.CHIP 1/16W 47 OHM TAPE		0	R7S2	0790001R	CHIP RESISTOR RECJUMPER-1-16C16T1608		0
R7K3	AQ00202R	RES.CHIP 1/16W 2.0K OHM TAPE		0	R7S2	0790011R	RES.CHIP 1/16W 10 OHM	0	
R7K3	0790051R	RES.CHIP 1/16W 10K OHM	0		R7S3	0790001R	CHIP RESISTOR RECJUMPER-1-16C16T1608		0
R7K4	0790001R	CHIP RESISTOR RECJUMPER-1-16C16T1608		0	R7S3	0790011R	RES.CHIP 1/16W 10 OHM	0	
R7K5	0790024R	RES.CHIP 1/16W 100 OHM		0	R7S4	0790001R	CHIP RESISTOR RECJUMPER-1-16C16T1608		0
R7K5	0790001R	CHIP RESISTOR RECJUMPER-1-16C16T1608	0		R7S4	0790011R	RES.CHIP 1/16W 10 OHM	0	
R7K6	0790001R	CHIP RESISTOR RECJUMPER-1-16C16T1608	0		R7S5	0790001R	CHIP RESISTOR RECJUMPER-1-16C16T1608		0
R7K7	AQ00331R	RES.CHIP 1/16W 10 OHM TAPE		0	R7S5	0790011R	RES.CHIP 1/16W 10 OHM	0	
R7K7	0790001R	CHIP RESISTOR RECJUMPER-1-16C16T1608	0		R7S6	0790001R	CHIP RESISTOR RECJUMPER-1-16C16T1608		0
R7K8	AQ00331R	RES.CHIP 1/16W 10 OHM TAPE		0	R7S6	0790011R	RES.CHIP 1/16W 10 OHM	0	
R7K8	0790001R	CHIP RESISTOR RECJUMPER-1-16C16T1608	0		R7S7	0790017R	RES.CHIP 1/16W 33 OHM		0
R7K9	AQ00331R	RES.CHIP 1/16W 10 OHM TAPE		0	R7S7	0790001R	CHIP RESISTOR RECJUMPER-1-16C16T1608	0	
R7L0	0790024R	RES.CHIP 1/16W 100 OHM		0	R7S8	0790017R	RES.CHIP 1/16W 33 OHM		0
R7L1	0790059R	RES.CHIP 1/16W 47K OHM		0	R7S9	0790001R	CHIP RESISTOR RECJUMPER-1-16C16T1608		0
R7L3	0790024R	RES.CHIP 1/16W 100 OHM		0	R7S9	0790051R	RES.CHIP 1/16W 10K OHM	0	
R7L4	0790054R	RES.CHIP 1/16W 18K OHM		0	R7T0	0790017R	RES.CHIP 1/16W 33 OHM		0
R7L4	AQ00337R	RES.CHIP 1/16W 33 OHM TAPE	0		R7T1	0790017R	RES.CHIP 1/16W 33 OHM		0
R7L5	AQ00337R	RES.CHIP 1/16W 33 OHM TAPE	0		R7T2	0790017R	RES.CHIP 1/16W 33 OHM		0
R7L6	0790047R	RES.CHIP 1/16W 5.6K OHM		0	R7T2	0790001R	CHIP RESISTOR RECJUMPER-1-16C16T1608		0
R7L6	0790001R	CHIP RESISTOR RECJUMPER-1-16C16T1608	0		R7T3	0790001R	CHIP RESISTOR RECJUMPER-1-16C16T1608	0	0
R7L7	0790001R	CHIP RESISTOR RECJUMPER-1-16C16T1608	0		R7T4	0790001R	CHIP RESISTOR RECJUMPER-1-16C16T1608	0	
R7L8	0790001R	CHIP RESISTOR RECJUMPER-1-16C16T1608		0	R7T6	0790011R	RES.CHIP 1/16W 10 OHM	0	
R7L9	0790001R	CHIP RESISTOR RECJUMPER-1-16C16T1608		0	R7U0	0790051R	RES.CHIP 1/16W 10K OHM		0
R7M1	0790017R	RES.CHIP 1/16W 33 OHM	0		R7U1	0790051R	RES.CHIP 1/16W 10K OHM		0
R7M2	0790017R	RES.CHIP 1/16W 33 OHM	0		R7U2	0790051R	RES.CHIP 1/16W 10K OHM		0
R7M3	0790054R	RES.CHIP 1/16W 18K OHM		0	R7U3	0790051R	RES.CHIP 1/16W 10K OHM		0
R7M3	0790001R	CHIP RESISTOR RECJUMPER-1-16C16T1608	0		R7U4	0790038R	RES.CHIP 1/16W 1.2K OHM		0
R7M4	0790001R	CHIP RESISTOR RECJUMPER-1-16C16T1608	0		R7U5	0790024R	RES.CHIP 1/16W 100 OHM		0
R7M5	0790024R	RES.CHIP 1/16W 100 OHM		0	R7U6	0790047R	RES.CHIP 1/16W 5.6K OHM		0
R7M5	0790011R	RES.CHIP 1/16W 10 OHM	0		R7U8	0790047R	RES.CHIP 1/16W 5.6K OHM		0
R7M6	0790011R	RES.CHIP 1/16W 10 OHM	0		R7U9	0790035R	RES.CHIP 1/16W 680 OHM		0
R7M7	0790047R	RES.CHIP 1/16W 5.6K OHM		0	R7V0	0790051R	RES.CHIP 1/16W 10K OHM		0
R7M7	0790011R	RES.CHIP 1/16W 10 OHM	0		R7V2	0790001R	CHIP RESISTOR RECJUMPER-1-16C16T1608		0
R7M8	0790051R	RES.CHIP 1/16W 10K OHM		0	R7V2	0790011R	RES.CHIP 1/16W 10 OHM	0	
R7M8	0790051R	RES.CHIP 1/16W 10K OHM	0		R7V3	AQ00235R	RES.CHIP 1/16W 36K OHM TAPE		0
R7M9	0790051R	RES.CHIP 1/16W 10K OHM		0	R7V3	0790011R	RES.CHIP 1/16W 10 OHM	0	
R7N0	0790051R	RES.CHIP 1/16W 10K OHM		0	R7V4	AQ00201R	RES.CHIP 1/16W 1.8K OHM TAPE		0
R7N2	0790001R	CHIP RESISTOR RECJUMPER-1-16C16T1608	0		R7V4	0790011R	RES.CHIP 1/16W 10 OHM	0	
R7N3	0790052R	RES.CHIP 1/16W 12K OHM		0	R7V5	AQ00214R	RES.CHIP 1/16W 5.6K OHM		0
R7N3	0790001R	CHIP RESISTOR RECJUMPER-1-16C16T1608	0		R7V5	0790051R	RES.CHIP 1/16W 10K OHM	0	
R7N4	0790039R	RES.CHIP 1/16W 1.5K OHM		0	R7V6	0790051R	RES.CHIP 1/16W 10K OHM		0
R7N5	0790051R	RES.CHIP 1/16W 10K OHM		0	R7V8	0790001R	CHIP RESISTOR RECJUMPER-1-16C16T1608		0
R7N5	0790011R	RES.CHIP 1/16W 10 OHM	0		R7V9	0790024R	RES.CHIP 1/16W 100 OHM		0
R7N6	0790054R	RES.CHIP 1/16W 18K OHM		0	R7V9	0790001R	CHIP RESISTOR RECJUMPER-1-16C16T1608	0	
R7N6	0790011R	RES.CHIP 1/16W 10 OHM	0		R7W0	0790051R	RES.CHIP 1/16W 10K OHM		0
R7N7	0790047R	RES.CHIP 1/16W 5.6K OHM		0	R7W1	0790051R	RES.CHIP 1/16W 10K OHM		0
R7N7	0790011R	RES.CHIP 1/16W 10 OHM	0		R7W1	0790001R	CHIP RESISTOR RECJUMPER-1-16C16T1608	0	
R7N8	0790024R	RES.CHIP 1/16W 100 OHM		0	R7W2	0790051R	RES.CHIP 1/16W 10K OHM		0
R7N8	0790011R	RES.CHIP 1/16W 10 OHM	0		R7W2	0790011R	RES.CHIP 1/16W 10 OHM	0	
R7N9	0790037R	RES.CHIP 1/16W 1.0K OHM		0	R7W3	0790051R	RES.CHIP 1/16W 10K OHM		0
R7N9	0790011R	RES.CHIP 1/16W 10 OHM	0		R7W3	0790011R	RES.CHIP 1/16W 10 OHM	0	
R7P1	0790011R	RES.CHIP 1/16W 10 OHM	0		R7W4	0790037R	RES.CHIP 1/16W 1.0K OHM		0
R7P2	0790011R	RES.CHIP 1/16W 10 OHM	0		R7W4	0790011R	RES.CHIP 1/16W 10 OHM	0	
R7P3	0790044R	RES.CHIP 1/16W 3.3K OHM	0		R7W5	0790051R	RES.CHIP 1/16W 10K OHM		0
R7P4	0790002R	RES.CHIP 1/16W 2.2 OHM	0		R7W5	0790011R	RES.CHIP 1/16W 10 OHM	0	
R7P5	0790011R	RES.CHIP 1/16W 10 OHM	0		R7W6	0790051R	RES.CHIP 1/16W 10K OHM		0
R7P6	0790002R	RES.CHIP 1/16W 2.2 OHM	0		R7W6	0790011R	RES.CHIP 1/16W 10 OHM	0	
R7P8	0790044R	RES.CHIP 1/16W 3.3K OHM	0		R7W7	0790051R	RES.CHIP 1/16W 10K OHM	0	0
R7P9	0790011R	RES.CHIP 1/16W 10 OHM	0		R7W7	0790011R	RES.CHIP 1/16W 10 OHM	0	
R7Q1	0790011R	RES.CHIP 1/16W 10 OHM	0		R7W8	0790011R	RES.CHIP 1/16W 10 OHM	0	
R7Q2	0790011R	RES.CHIP 1/16W 10 OHM	0		R7W9	0790044R	RES.CHIP 1/16W 3.3K OHM	0	
R7Q3	0790001R	CHIP RESISTOR RECJUMPER-1-16C16T1608	0		R7X1	0790011R	RES.CHIP 1/16W 10 OHM		0
R7Q4	0790051R	RES.CHIP 1/16W 10K OHM	0		R7X1	0790002R	RES.CHIP 1/16W 2.2 OHM	0	
R7Q5	0790051R	RES.CHIP 1/16W 10K OHM	0		R7X2	0790011R	RES.CHIP 1/16W 10 OHM	0	0
R7Q7	0790001R	CHIP RESISTOR RECJUMPER-1-16C16T1608	0		R7X3	0790001R	CHIP RESISTOR RECJUMPER-1-16C16T1608		0
R7Q8	0790001R	CHIP RESISTOR RECJUMPER-1-16C16T1608	0		R7X3	0790002R	RES.CHIP 1/16W 2.2 OHM	0	
R7Q9	0790001R	CHIP RESISTOR RECJUMPER-1-16C16T1608	0		R7X4	0790001R	CHIP RESISTOR RECJUMPER-1-16C16T1608		0
R7R2	0790011R	RES.CHIP 1/16W 10 OHM	0		R7X5	0790001R	CHIP RESISTOR RECJUMPER-1-16C16T1608		0
R7R3	0790011R	RES.CHIP 1/16W 10 OHM	0		R7X5	0790044R	RES.CHIP 1/16W 3.3K OHM	0	

PRODUCT SERVICE NOTE: Components marked with a ⚠ have special characteristics important to safety. Before replacing any of these components, read carefully, the PRODUCT SAFETY NOTICE of this Service Manual. Don't degrade the safety of the receiver through improper servicing.

SYMBOL NO.	PART NO.	PART DESCRIPTION	50"	60"	SYMBOL NO.	PART NO.	PART DESCRIPTION	50"	60"
R7X6	0790001R	CHIP RESISTOR RECJUMPER-1-16C16T1608		0	R884	0790001R	CHIP RESISTOR RECJUMPER-1-16C16T1608	0	
R7X6	0790011R	RES.CHIP 1/16W 10 OHM	0		R888	0790001R	CHIP RESISTOR RECJUMPER-1-16C16T1608	0	
R7X7	0790011R	RES.CHIP 1/16W 10 OHM	0		⚠ R901	AT03672M	RES.MTL GRAZD FLM 1/2W 3.3M	0	0
R7X8	0790011R	RES.CHIP 1/16W 10 OHM	0		R902	AT04371	W/WRE-R62K15W AKANE	0	0
R7Y1	0790051R	RES.CHIP 1/16W 10K OHM	0		R905	AT03897M	100KOHM 1/2W RDS50 CARBON FILM RESISTOR	0	0
R7Y2	0790051R	RES.CHIP 1/16W 10K OHM	0		R931	AT03459S	METAL OX. 15K OHM 2W	0	0
R7Y3	0790001R	CHIP RESISTOR RECJUMPER-1-16C16T1608	0		R932	AT03459S	METAL OX. 15K OHM 2W	0	0
R7Y4	0790001R	CHIP RESISTOR RECJUMPER-1-16C16T1608	0		R933	AT03179S	METAL OX. 0.47OHM 1W	0	0
R7Y5	0790001R	CHIP RESISTOR RECJUMPER-1-16C16T1608	0		R934	AT03179S	METAL OX. 0.47OHM 1W	0	0
R7Y6	0790001R	CHIP RESISTOR RECJUMPER-1-16C16T1608	0		R935	AT03179S	METAL OX. 0.47OHM 1W	0	0
R7Y8	0790011R	RES.CHIP 1/16W 10 OHM	0		R937	0700038M	RES.-CARBON FLM 1/16W 680-JB	0	0
R7Y9	0790011R	RES.CHIP 1/16W 10 OHM	0		R938	AT03844M	10.0OHM 1/2W RDS50 CARBON FILM RESISTOR	0	0
R7Z1	0790011R	RES.CHIP 1/16W 10 OHM	0		R939	0700043M	RES.-CARBON FLM 1/16W 1.5K-JB	0	0
R7Z2	0790001R	CHIP RESISTOR RECJUMPER-1-16C16T1608	0		R940	0700041M	RES.-CARBON FLM 1/16W 1.0K-JB	0	0
R7Z4	0790001R	CHIP RESISTOR RECJUMPER-1-16C16T1608	0		R941	0700055M	RES.-CARBON FLM 1/16W 12K-JB	0	0
R7Z6	0790001R	CHIP RESISTOR RECJUMPER-1-16C16T1608	0		R942	AT03665M	RES.MTL GRAZD FLM 1/2W 1M	0	0
R7Z7	0790011R	RES.CHIP 1/16W 10 OHM	0		R943	0700047M	RES.-CARBON FLM 1/16W 3.3K-JB	0	0
R7Z8	0790011R	RES.CHIP 1/16W 10 OHM	0		R944	0700056M	RES.-CARBON FLM 1/16W 15K-JB	0	0
R7Z9	0790011R	RES.CHIP 1/16W 10 OHM	0		⚠ R945	AT03676M	RES.MTL GRAZD FLM 1/2W 6.8M	0	0
R801	0790011R	RES.CHIP 1/16W 10 OHM	0		R946	0700041M	RES.-CARBON FLM 1/16W 1.0K-JB	0	0
R802	0790011R	RES.CHIP 1/16W 10 OHM	0		R947	0700054M	RES.-CARBON FLM 1/16W 10K-JB	0	0
R803	0790011R	RES.CHIP 1/16W 10 OHM	0		R948	0700043M	RES.-CARBON FLM 1/16W 1.5K-JB	0	0
R804	0790055R	RES.CHIP 1/16W 22K OHM		0	R949	AT03186S	METAL OX. 0.82OHM 1W	0	0
R805	0790037R	RES.CHIP 1/16W 1.0K OHM		0	R950	AT03191S	METAL OX. 1.2OHM 1W	0	0
R806	AQ00236R	RES.CHIP 1/16W 39K OHM TAPE		0	R955	0700056M	RES.-CARBON FLM 1/16W 15K-JB	0	0
R806	0790051R	RES.CHIP 1/16W 10K OHM	0		R956	0700045M	RES.-CARBON FLM 1/16W 2.2K-JB	0	0
R807	0790055R	RES.CHIP 1/16W 22K OHM		0	R957	0700056M	RES.-CARBON FLM 1/16W 15K-JB	0	0
R807	0790001R	CHIP RESISTOR RECJUMPER-1-16C16T1608	0		R958	0700046M	RES.-CARBON FLM 1/16W 2.7K-JB	0	0
R808	0790055R	RES.CHIP 1/16W 22K OHM		0	R959	0700054M	RES.-CARBON FLM 1/16W 10K-JB	0	0
R808	0790001R	CHIP RESISTOR RECJUMPER-1-16C16T1608	0		R960	0700041M	RES.-CARBON FLM 1/16W 1.0K-JB	0	0
R809	0790001R	CHIP RESISTOR RECJUMPER-1-16C16T1608	0		R963	0700063M	RES.-CARBON FLM 1/16W 47K-JB	0	0
R810	0790001R	CHIP RESISTOR RECJUMPER-1-16C16T1608	0		R964	0700041M	RES.-CARBON FLM 1/16W 1.0K-JB	0	0
R811	0790011R	RES.CHIP 1/16W 10 OHM	0		R966	0700045M	RES.-CARBON FLM 1/16W 2.2K-JB	0	0
R813	0790055R	RES.CHIP 1/16W 22K OHM		0	R967	0700055M	RES.-CARBON FLM 1/16W 12K-JB	0	0
R814	0790001R	CHIP RESISTOR RECJUMPER-1-16C16T1608		0	R968	AT03856M	82.0OHM 1/2W RDS50 CARBON FILM RESISTOR	0	0
R816	0790037R	RES.CHIP 1/16W 1.0K OHM	0		R969	AT03869M	820OHM 1/2W RDS50 CARBON FILM RESISTOR	0	0
R817	0790024R	RES.CHIP 1/16W 100 OHM		0	R970	0100059M	RES.-CARBON FLM 1/8W 560-JB	0	0
R818	AQ00209R	RES.CHIP 1/16W 3.9K OHM TAPE		0	R971	2974432M	JUMPER WIRE (0.5 L=52MM)	0	0
R819	AQ00217R	RES.CHIP 1/16W 7.5K OHM TAPE		0	R973	0119599M	RES.-MTL FLM 1/8W 470-FB	0	0
R819	0790037R	RES.CHIP 1/16W 1.0K OHM	0		R974	0700041M	RES.-CARBON FLM 1/16W 1.0K-JB	0	0
R820	AQ00194R	RES.CHIP 1/16W 1.0K OHM TAPE		0	R975	0700047M	RES.-CARBON FLM 1/16W 3.3K-JB	0	0
R822	0790037R	RES.CHIP 1/16W 1.0K OHM	0		R977	0700028M	RES.-CARBON FLM 1/16W 120-JB	0	0
R824	0790051R	RES.CHIP 1/16W 10K OHM	0		R978	0700042M	RES.-CARBON FLM 1/16W 1.2K-JB	0	0
R826	0790055R	RES.CHIP 1/16W 22K OHM	0		R979	0700044M	RES.-CARBON FLM 1/16W 1.8K-JB	0	0
R827	0790055R	RES.CHIP 1/16W 22K OHM	0		R980	AT03879M	4.7KOHM 1/2W RDS50 CARBON FILM RESISTOR	0	
R829	0790064R	RES.CHIP 1/16W 100K OHM	0		R981	0700044M	RES.-CARBON FLM 1/16W 1.8K-JB	0	0
R830	0790053R	RES.CHIP 1/16W 15K OHM	0		R982	0700028M	RES.-CARBON FLM 1/16W 120-JB	0	0
R831	0790052R	RES.CHIP 1/16W 12K OHM	0		R983	0700042M	RES.-CARBON FLM 1/16W 1.2K-JB	0	0
R833	AQ00218R	RES.CHIP 1/16W 8.2K OHM TAPE	0	0	R984	0700058M	RES.-CARBON FLM 1/16W 22K-JB	0	0
R834	AQ00231R	RES.CHIP 1/16W 24K OHM TAPE		0	R985	AT03886M	15KOHM 1/2W RDS50 CARBON FILM RESISTOR	0	0
R837	AQ00192R	RES.CHIP 1/16W 820 OHM TAPE		0	R986	0700032M	RES.-CARBON FLM 1/16W 220-JB	0	0
R838	AQ00192R	RES.CHIP 1/16W 820 OHM TAPE		0	R987	0700049M	RES.-CARBON FLM 1/16W 4.7K-JB	0	0
R839	AQ00194R	RES.CHIP 1/16W 1.0K OHM TAPE		0	R988	0700041M	RES.-CARBON FLM 1/16W 1.0K-JB	0	0
R841	0790059R	RES.CHIP 1/16W 47K OHM	0		R989	0700041M	RES.-CARBON FLM 1/16W 1.0K-JB	0	0
R842	0790055R	RES.CHIP 1/16W 22K OHM	0	0	R990	0700041M	RES.-CARBON FLM 1/16W 1.0K-JB	0	0
R843	0790051R	RES.CHIP 1/16W 10K OHM	0		R991	0700054M	RES.-CARBON FLM 1/16W 10K-JB	0	0
R844	0790051R	RES.CHIP 1/16W 10K OHM	0		⚠ R992	0700049M	RES.-CARBON FLM 1/16W 4.7K-JB	0	0
R845	0790037R	RES.CHIP 1/16W 1.0K OHM	0		⚠ R993	0700036M	RES.-CARBON FLM 1/16W 470-JB	0	0
R847	0790001R	CHIP RESISTOR RECJUMPER-1-16C16T1608	0		R994	0700063M	RES.-CARBON FLM 1/16W 47K-JB	0	0
R850	0790051R	RES.CHIP 1/16W 10K OHM	0		R995	0700054M	RES.-CARBON FLM 1/16W 10K-JB	0	0
R855	0790001R	CHIP RESISTOR RECJUMPER-1-16C16T1608	0		R996	0700052M	RES.-CARBON FLM 1/16W 6.8K-JB	0	0
R856	0790017R	RES.CHIP 1/16W 33 OHM	0		R997	0700041M	RES.-CARBON FLM 1/16W 1.0K-JB	0	0
R857	0790017R	RES.CHIP 1/16W 33 OHM	0		R998	0700041M	RES.-CARBON FLM 1/16W 1.0K-JB	0	0
R861	0790001R	CHIP RESISTOR RECJUMPER-1-16C16T1608	0		R9A1	0700045M	RES.-CARBON FLM 1/16W 2.2K-JB	0	0
R862	0790001R	CHIP RESISTOR RECJUMPER-1-16C16T1608	0		R9A2	0700045M	RES.-CARBON FLM 1/16W 2.2K-JB	0	0
R863	0790001R	CHIP RESISTOR RECJUMPER-1-16C16T1608	0		R9A3	0700041M	RES.-CARBON FLM 1/16W 1.0K-JB	0	0
R864	0790001R	CHIP RESISTOR RECJUMPER-1-16C16T1608	0		R9A5	0700045M	RES.-CARBON FLM 1/16W 2.2K-JB	0	
R865	0790001R	CHIP RESISTOR RECJUMPER-1-16C16T1608	0		R9A7	0700045M	RES.-CARBON FLM 1/16W 2.2K-JB	0	0
R866	0790001R	CHIP RESISTOR RECJUMPER-1-16C16T1608	0		R9AA	0119599M	RES.-MTL FLM 1/8W 470-FB	0	0
R867	0790001R	CHIP RESISTOR RECJUMPER-1-16C16T1608	0		RA01	0790046R	RES.CHIP 1/16W 4.7K OHM	0	0
R868	0790001R	CHIP RESISTOR RECJUMPER-1-16C16T1608	0		RA02	0790037R	RES.CHIP 1/16W 1.0K OHM	0	0
R869	0790001R	CHIP RESISTOR RECJUMPER-1-16C16T1608	0		RA03	0790037R	RES.CHIP 1/16W 1.0K OHM	0	0
R870	0790001R	CHIP RESISTOR RECJUMPER-1-16C16T1608	0		RA04	0790037R	RES.CHIP 1/16W 1.0K OHM	0	0
R881	0790001R	CHIP RESISTOR RECJUMPER-1-16C16T1608	0		RA05	0790037R	RES.CHIP 1/16W 1.0K OHM	0	0
R882	0790037R	RES.CHIP 1/16W 1.0K OHM	0		RA07	0790001R	CHIP RESISTOR RECJUMPER-1-16C16T1608	0	0

PRODUCT SERVICE NOTE: Components marked with a ⚠ have special characteristics important to safety. Before replacing any of these components, read carefully, the PRODUCT SAFETY NOTICE of this Service Manual. Don't degrade the safety of the receiver through improper servicing.

SYMBOL NO.	PART NO.	PART DESCRIPTION	50"	60"	SYMBOL NO.	PART NO.	PART DESCRIPTION	50"	60"
RA08	0790042R	RES.CHIP 1/16W 2.2K OHM	0	0	RAM4	0700041M	RES.-CARBON FLM 1/16W 1.0K-JB	0	0
RA09	0790042R	RES.CHIP 1/16W 2.2K OHM	0	0	RAM5	0700041M	RES.-CARBON FLM 1/16W 1.0K-JB	0	0
RA10	0790051R	RES.CHIP 1/16W 10K OHM	0	0	RAM6	0100113M	RES.-CARBON FLM 1/8W 100K-JB	0	0
RA11	0790051R	RES.CHIP 1/16W 10K OHM	0	0	RAM7	0700054M	RES.-CARBON FLM 1/16W 10K-JB	0	0
RA12	0790042R	RES.CHIP 1/16W 2.2K OHM	0	0	RAM8	0100113M	RES.-CARBON FLM 1/8W 100K-JB	0	0
RA13	0790042R	RES.CHIP 1/16W 2.2K OHM	0	0	RAM9	AT03197S	METAL OX. 2.2OHM 1W	0	0
RA14	0790024R	RES.CHIP 1/16W 100 OHM	0	0	RAN1	AT03197S	METAL OX. 2.2OHM 1W	0	0
RA15	0790024R	RES.CHIP 1/16W 100 OHM	0	0	RAN2	0700065M	RES.-CARBON FLM 1/16W 68K-JB	0	0
RA16	0790037R	RES.CHIP 1/16W 1.0K OHM	0	0	RAN3	0700065M	RES.-CARBON FLM 1/16W 68K-JB	0	0
RA17	0790037R	RES.CHIP 1/16W 1.0K OHM	0	0	RAN4	AT03871M	1KOHM 1/2W RDS50 CARBON FILM RESISTOR	0	0
RA18	0790055R	RES.CHIP 1/16W 22K OHM	0	0	RAN5	AT03871M	1KOHM 1/2W RDS50 CARBON FILM RESISTOR	0	0
RA19	0790055R	RES.CHIP 1/16W 22K OHM	0	0	RC01	0790024R	RES.CHIP 1/16W 100 OHM	0	0
RA20	0790055R	RES.CHIP 1/16W 22K OHM	0	0	RC02	0790024R	RES.CHIP 1/16W 100 OHM	0	0
RA21	0790055R	RES.CHIP 1/16W 22K OHM	0	0	RC03	0790024R	RES.CHIP 1/16W 100 OHM	0	0
RA22	0790042R	RES.CHIP 1/16W 2.2K OHM	0	0	RC04	0790024R	RES.CHIP 1/16W 100 OHM	0	0
RA23	0790042R	RES.CHIP 1/16W 2.2K OHM	0	0	RC05	0790024R	RES.CHIP 1/16W 100 OHM	0	0
RA24	0790055R	RES.CHIP 1/16W 22K OHM	0	0	RC06	0790024R	RES.CHIP 1/16W 100 OHM	0	0
RA25	0790055R	RES.CHIP 1/16W 22K OHM	0	0	RC07	0790024R	RES.CHIP 1/16W 100 OHM	0	0
RA26	0790051R	RES.CHIP 1/16W 10K OHM	0	0	RC08	0790024R	RES.CHIP 1/16W 100 OHM	0	0
RA27	0790051R	RES.CHIP 1/16W 10K OHM	0	0	RC09	0790024R	RES.CHIP 1/16W 100 OHM	0	0
RA51	0790064R	RES.CHIP 1/16W 100K OHM	0	0	RC10	0790059R	RES.CHIP 1/16W 47K OHM	0	0
RA52	0790037R	RES.CHIP 1/16W 1.0K OHM	0	0	RC11	0790051R	RES.CHIP 1/16W 10K OHM	0	0
RA53	0790063R	RES.CHIP 1/16W 82K OHM	0	0	RC12	0790051R	RES.CHIP 1/16W 10K OHM	0	0
RA54	0790028R	RES.CHIP 1/16W 220 OHM	0	0	RC13	0790024R	RES.CHIP 1/16W 100 OHM	0	0
RA55	0790037R	RES.CHIP 1/16W 1.0K OHM	0	0	RC14	0790033R	RES.CHIP 1/16W 470 OHM	0	0
RA56	0790037R	RES.CHIP 1/16W 1.0K OHM	0	0	RC15	AQ00185R	RES.CHIP 1/16W 470 OHM TAPE	0	0
RA57	0790031R	RES.CHIP 1/16W 330 OHM	0	0	RC17	AQ00187R	RES.CHIP 1/16W 560 OHM TAPE	0	0
RA58	0790037R	RES.CHIP 1/16W 1.0K OHM	0	0	RC18	0790024R	RES.CHIP 1/16W 100 OHM	0	0
RA59	0790024R	RES.CHIP 1/16W 100 OHM	0	0	RC19	0790042R	RES.CHIP 1/16W 2.2K OHM	0	0
RA60	0790058R	RES.CHIP 1/16W 39K OHM	0	0	RC20	0790024R	RES.CHIP 1/16W 100 OHM	0	0
RA61	0790052R	RES.CHIP 1/16W 12K OHM	0	0	RC21	0790037R	RES.CHIP 1/16W 1.0K OHM	0	0
RA62	0790064R	RES.CHIP 1/16W 100K OHM	0	0	RC22	AQ00205R	RES.CHIP 1/16W 2.7K OHM TAPE	0	0
RA63	0790037R	RES.CHIP 1/16W 1.0K OHM	0	0	RC23	AQ00212R	RES.CHIP 1/16W 4.7K OHM TAPE	0	0
RA64	0790063R	RES.CHIP 1/16W 82K OHM	0	0	RC24	AQ00212R	RES.CHIP 1/16W 4.7K OHM TAPE	0	0
RA65	0790028R	RES.CHIP 1/16W 220 OHM	0	0	RC25	0790024R	RES.CHIP 1/16W 100 OHM	0	0
RA66	0790037R	RES.CHIP 1/16W 1.0K OHM	0	0	RC26	0790037R	RES.CHIP 1/16W 1.0K OHM	0	0
RA67	0790037R	RES.CHIP 1/16W 1.0K OHM	0	0	RC27	0790024R	RES.CHIP 1/16W 100 OHM	0	0
RA68	0790031R	RES.CHIP 1/16W 330 OHM	0	0	RC28	0790037R	RES.CHIP 1/16W 1.0K OHM	0	0
RA69	0790037R	RES.CHIP 1/16W 1.0K OHM	0	0	RC29	AQ00203R	RES.CHIP 1/16W 2.2K OHM TAPE	0	0
RA70	0790024R	RES.CHIP 1/16W 100 OHM	0	0	RC30	AQ00221R	RES.CHIP 1/16W 10K OHM TAPE	0	0
RA71	0790058R	RES.CHIP 1/16W 39K OHM	0	0	RC31	AQ00218R	RES.CHIP 1/16W 8.2K OHM TAPE		0
RA72	0790052R	RES.CHIP 1/16W 12K OHM	0	0	RC31	AQ00218R	RES.CHIP 1/16W 8.2K OHM TAPE	0	
RA73	0790069R	RES.CHIP 1/16W 270K OHM	0	0	RC32	0790024R	RES.CHIP 1/16W 100 OHM	0	0
RA74	0790061R	RES.CHIP 1/16W 56K OHM	0	0	RC33	0790037R	RES.CHIP 1/16W 1.0K OHM	0	0
RA75	0790059R	RES.CHIP 1/16W 47K OHM	0	0	RC34	0790024R	RES.CHIP 1/16W 100 OHM	0	0
RA76	0790024R	RES.CHIP 1/16W 100 OHM	0	0	RC35	0790037R	RES.CHIP 1/16W 1.0K OHM	0	0
RA77	0790045R	RES.CHIP 1/16W 3.9K OHM	0	0	RC36	0790044R	RES.CHIP 1/16W 3.3K OHM	0	0
RA78	0790024R	RES.CHIP 1/16W 100 OHM	0	0	RC37	0790048R	RES.CHIP 1/16W 6.8K OHM	0	0
RA79	0790024R	RES.CHIP 1/16W 100 OHM	0	0	RC38	0790061R	RES.CHIP 1/16W 56K OHM	0	0
RA80	0790024R	RES.CHIP 1/16W 100 OHM	0	0	RC39	0790058R	RES.CHIP 1/16W 39K OHM	0	0
RA81	0790024R	RES.CHIP 1/16W 100 OHM	0	0	RC40	0790024R	RES.CHIP 1/16W 100 OHM	0	0
RA82	0790024R	RES.CHIP 1/16W 100 OHM	0	0	RC41	0790033R	RES.CHIP 1/16W 470 OHM	0	0
RA83	0790024R	RES.CHIP 1/16W 100 OHM	0	0	RC42	AQ00185R	RES.CHIP 1/16W 470 OHM TAPE	0	0
RA84	0790051R	RES.CHIP 1/16W 10K OHM	0	0	RC43	AQ00196R	RES.CHIP 1/16W 1.2K OHM TAPE	0	0
RA85	0790059R	RES.CHIP 1/16W 47K OHM	0	0	RC44	AQ00196R	RES.CHIP 1/16W 1.2K OHM TAPE	0	0
RA86	0790051R	RES.CHIP 1/16W 10K OHM	0	0	RC45	0790024R	RES.CHIP 1/16W 100 OHM	0	0
RAA1	0700027M	RES.-CARBON FLM 1/16W 100-JB	0	0	RC46	0790037R	RES.CHIP 1/16W 1.0K OHM	0	0
RAA2	0700027M	RES.-CARBON FLM 1/16W 100-JB	0	0	RC47	0790061R	RES.CHIP 1/16W 56K OHM	0	0
RAA3	0700036M	RES.-CARBON FLM 1/16W 470-JB	0	0	RC48	0790058R	RES.CHIP 1/16W 39K OHM	0	0
RAA4	0700041M	RES.-CARBON FLM 1/16W 1.0K-JB	0	0	RC49	0790024R	RES.CHIP 1/16W 100 OHM	0	0
RAA5	0700041M	RES.-CARBON FLM 1/16W 1.0K-JB	0	0	RC50	AQ00185R	RES.CHIP 1/16W 470 OHM TAPE	0	0
RAA6	0100113M	RES.-CARBON FLM 1/8W 100K-JB	0	0	RC51	0790033R	RES.CHIP 1/16W 470 OHM	0	0
RAA7	0700054M	RES.-CARBON FLM 1/16W 10K-JB	0	0	RC52	AQ00185R	RES.CHIP 1/16W 470 OHM TAPE	0	0
RAA8	0100113M	RES.-CARBON FLM 1/8W 100K-JB	0	0	RC53	0790024R	RES.CHIP 1/16W 100 OHM	0	0
RAA9	AT03197S	METAL OX. 2.2OHM 1W	0	0	RC54	0790037R	RES.CHIP 1/16W 1.0K OHM	0	0
RAC1	AT03197S	METAL OX. 2.2OHM 1W	0	0	RC55	0790061R	RES.CHIP 1/16W 56K OHM	0	0
RAC2	0700065M	RES.-CARBON FLM 1/16W 68K-JB	0	0	RC56	0790058R	RES.CHIP 1/16W 39K OHM	0	0
RAC3	0700065M	RES.-CARBON FLM 1/16W 68K-JB	0	0	RC57	0790024R	RES.CHIP 1/16W 100 OHM	0	0
RAC4	AT03871M	1KOHM 1/2W RDS50 CARBON FILM RESISTOR	0	0	RC59	AQ00192R	RES.CHIP 1/16W 820 OHM TAPE	0	0
RAC5	AT03871M	1KOHM 1/2W RDS50 CARBON FILM RESISTOR	0	0	RC60	0790033R	RES.CHIP 1/16W 470 OHM	0	0
RAC6	0700032M	RES.-CARBON FLM 1/16W 220-JB	0	0	RC61	AQ00185R	RES.CHIP 1/16W 470 OHM TAPE	0	0
RAC7	0700032M	RES.-CARBON FLM 1/16W 220-JB	0	0	RC62	0790024R	RES.CHIP 1/16W 100 OHM	0	0
RAM1	0700027M	RES.-CARBON FLM 1/16W 100-JB	0	0	RC63	0790037R	RES.CHIP 1/16W 1.0K OHM	0	0
RAM2	0700027M	RES.-CARBON FLM 1/16W 100-JB	0	0	RC64	0790001R	CHIP RESISTOR RECJUMPER-1-16C16T1608	0	0
RAM3	0700036M	RES.-CARBON FLM 1/16W 470-JB	0	0	RC65	0790055R	RES.CHIP 1/16W 22K OHM	0	0

PRODUCT SERVICE NOTE: Components marked with a ⚠ have special characteristics important to safety. Before replacing any of these components, read carefully, the PRODUCT SAFETY NOTICE of this Service Manual. Don't degrade the safety of the receiver through improper servicing.

SYMBOL NO.	PART NO.	PART DESCRIPTION	50"	60"	SYMBOL NO.	PART NO.	PART DESCRIPTION	50"	60"
RC66	0790055R	RES.CHIP 1/16W 22K OHM	0	0	RE68	0790024R	RES.CHIP 1/16W 100 OHM	0	0
RC67	0790051R	RES.CHIP 1/16W 10K OHM	0	0	RE69	0790024R	RES.CHIP 1/16W 100 OHM	0	0
RC69	0790001R	CHIP RESISTOR RECJUMPER-1-16C16T1608	0	0	RE70	0790024R	RES.CHIP 1/16W 100 OHM	0	0
RC70	0790055R	RES.CHIP 1/16W 22K OHM	0	0	RE71	0790037R	RES.CHIP 1/16W 1.0K OHM	0	0
RC71	0790055R	RES.CHIP 1/16W 22K OHM	0	0	RE72	0790037R	RES.CHIP 1/16W 1.0K OHM	0	0
RC72	0790051R	RES.CHIP 1/16W 10K OHM	0	0	RE73	0790035R	RES.CHIP 1/16W 680 OHM	0	0
RC74	0790037R	RES.CHIP 1/16W 1.0K OHM	0	0	RE74	0790024R	RES.CHIP 1/16W 100 OHM	0	0
RC75	0790033R	RES.CHIP 1/16W 470 OHM	0	0	RE75	0790024R	RES.CHIP 1/16W 100 OHM	0	0
RE01	0790031R	RES.CHIP 1/16W 330 OHM	0	0	RE76	0790024R	RES.CHIP 1/16W 100 OHM	0	0
RE02	0790033R	RES.CHIP 1/16W 470 OHM	0	0	RE77	0790024R	RES.CHIP 1/16W 100 OHM	0	0
RE03	AQ00185R	RES.CHIP 1/16W 470 OHM TAPE	0	0	RE78	0790024R	RES.CHIP 1/16W 100 OHM	0	0
RE04	AQ00187R	RES.CHIP 1/16W 560 OHM TAPE	0	0	RE79	0790024R	RES.CHIP 1/16W 100 OHM	0	0
RE05	0790031R	RES.CHIP 1/16W 330 OHM	0	0	RE80	0790024R	RES.CHIP 1/16W 100 OHM	0	0
RE06	0790026R	RES.CHIP 1/16W 150 OHM	0	0	RE81	0790024R	RES.CHIP 1/16W 100 OHM	0	0
RE07	0790024R	RES.CHIP 1/16W 100 OHM	0	0	RE82	0790024R	RES.CHIP 1/16W 100 OHM	0	0
RE08	0790042R	RES.CHIP 1/16W 2.2K OHM	0	0	RE83	0790024R	RES.CHIP 1/16W 100 OHM	0	0
RE09	0790024R	RES.CHIP 1/16W 100 OHM	0	0	RE84	0790024R	RES.CHIP 1/16W 100 OHM	0	0
RE10	0790037R	RES.CHIP 1/16W 1.0K OHM	0	0	RE85	0790024R	RES.CHIP 1/16W 100 OHM	0	0
RE11	AQ00205R	RES.CHIP 1/16W 2.7K OHM TAPE	0	0	RE86	0790024R	RES.CHIP 1/16W 100 OHM	0	0
RE12	AQ00212R	RES.CHIP 1/16W 4.7K OHM TAPE	0	0	RE87	0790024R	RES.CHIP 1/16W 100 OHM	0	0
RE13	AQ00212R	RES.CHIP 1/16W 4.7K OHM TAPE	0	0	RE88	0790024R	RES.CHIP 1/16W 100 OHM	0	0
RE14	0790024R	RES.CHIP 1/16W 100 OHM	0	0	RE89	0790024R	RES.CHIP 1/16W 100 OHM	0	0
RE15	0790037R	RES.CHIP 1/16W 1.0K OHM	0	0	RE90	0790037R	RES.CHIP 1/16W 1.0K OHM	0	0
RE16	0790024R	RES.CHIP 1/16W 100 OHM	0	0	RE91	0790001R	CHIP RESISTOR RECJUMPER-1-16C16T1608	0	0
RE17	0790037R	RES.CHIP 1/16W 1.0K OHM	0	0	RE95	0790033R	RES.CHIP 1/16W 470 OHM	0	0
RE18	AQ00203R	RES.CHIP 1/16W 2.2K OHM TAPE	0	0	RE97	0790035R	RES.CHIP 1/16W 680 OHM	0	0
RE19	AQ00221R	RES.CHIP 1/16W 10K OHM TAPE	0	0	REA0	0790037R	RES.CHIP 1/16W 1.0K OHM	0	0
RE20	AQ00218R	RES.CHIP 1/16W 8.2K OHM TAPE		0	REA7	0790051R	RES.CHIP 1/16W 10K OHM	0	0
RE20	AQ00218R	RES.CHIP 1/16W 8.2K OHM TAPE	0		REA8	0790051R	RES.CHIP 1/16W 10K OHM	0	0
RE21	0790024R	RES.CHIP 1/16W 100 OHM	0	0	RJ06	0790051R	RES.CHIP 1/16W 10K OHM	0	0
RE22	0790037R	RES.CHIP 1/16W 1.0K OHM	0	0	RJ09	AQ00172R	RES.CHIP 1/16W 150 OHM TAPE	0	0
RE23	0790001R	CHIP RESISTOR RECJUMPER-1-16C16T1608	0	0	RJ10	AQ00164R	RES.CHIP 1/16W 75 OHM TAPE	0	0
RE24	0790024R	RES.CHIP 1/16W 100 OHM	0	0	RJ11	AQ00164R	RES.CHIP 1/16W 75 OHM TAPE	0	0
RE25	0790042R	RES.CHIP 1/16W 2.2K OHM	0	0	RJ12	0790015R	RES.CHIP 1/16W 22 OHM	0	0
RE26	0790001R	CHIP RESISTOR RECJUMPER-1-16C16T1608	0	0	RJ14	0790024R	RES.CHIP 1/16W 100 OHM	0	0
RE27	0790024R	RES.CHIP 1/16W 100 OHM	0	0	RJ15	0790039R	RES.CHIP 1/16W 1.5K OHM	0	0
RE28	0790042R	RES.CHIP 1/16W 2.2K OHM	0	0	RJ16	0790001R	CHIP RESISTOR RECJUMPER-1-16C16T1608	0	0
RE29	0790001R	CHIP RESISTOR RECJUMPER-1-16C16T1608	0	0	RJ17	AQ00164R	RES.CHIP 1/16W 75 OHM TAPE	0	0
RE30	0790024R	RES.CHIP 1/16W 100 OHM	0	0	RJ18	AQ00165R	RES.CHIP 1/16W 82 OHM TAPE		0
RE31	0790042R	RES.CHIP 1/16W 2.2K OHM	0	0	RJ18	AQ00165R	RES.CHIP 1/16W 82 OHM TAPE	0	
RE32	0790024R	RES.CHIP 1/16W 100 OHM	0	0	RJ19	0790015R	RES.CHIP 1/16W 22 OHM	0	0
RE33	0790037R	RES.CHIP 1/16W 1.0K OHM	0	0	RJ21	0790024R	RES.CHIP 1/16W 100 OHM	0	0
RE34	0790044R	RES.CHIP 1/16W 3.3K OHM	0	0	RJ22	0790039R	RES.CHIP 1/16W 1.5K OHM	0	0
RE35	0790048R	RES.CHIP 1/16W 6.8K OHM	0	0	RJ23	0790001R	CHIP RESISTOR RECJUMPER-1-16C16T1608	0	0
RE36	0790061R	RES.CHIP 1/16W 56K OHM	0	0	RJ24	AQ00164R	RES.CHIP 1/16W 75 OHM TAPE	0	0
RE37	0790058R	RES.CHIP 1/16W 39K OHM	0	0	RJ25	AQ00165R	RES.CHIP 1/16W 82 OHM TAPE		0
RE38	0790024R	RES.CHIP 1/16W 100 OHM	0	0	RJ25	AQ00165R	RES.CHIP 1/16W 82 OHM TAPE	0	
RE39	0790033R	RES.CHIP 1/16W 470 OHM	0	0	RJ26	0790015R	RES.CHIP 1/16W 22 OHM	0	0
RE40	AQ00185R	RES.CHIP 1/16W 470 OHM TAPE	0	0	RJ28	0790024R	RES.CHIP 1/16W 100 OHM	0	0
RE41	AQ00196R	RES.CHIP 1/16W 1.2K OHM TAPE	0	0	RJ29	0790039R	RES.CHIP 1/16W 1.5K OHM	0	0
RE42	AQ00196R	RES.CHIP 1/16W 1.2K OHM TAPE	0	0	RJ30	0790001R	CHIP RESISTOR RECJUMPER-1-16C16T1608	0	0
RE43	0790024R	RES.CHIP 1/16W 100 OHM	0	0	RJ31	0790057R	RES.CHIP 1/16W 33K OHM	0	0
RE44	0790037R	RES.CHIP 1/16W 1.0K OHM	0	0	RJ33	0790051R	RES.CHIP 1/16W 10K OHM	0	0
RE45	0790061R	RES.CHIP 1/16W 56K OHM	0	0	RJ34	0790051R	RES.CHIP 1/16W 10K OHM	0	0
RE46	0790058R	RES.CHIP 1/16W 39K OHM	0	0	RJ35	0790037R	RES.CHIP 1/16W 1.0K OHM	0	0
RE47	0790024R	RES.CHIP 1/16W 100 OHM	0	0	RJ36	0790024R	RES.CHIP 1/16W 100 OHM	0	0
RE48	0790033R	RES.CHIP 1/16W 470 OHM	0	0	RJ37	0790024R	RES.CHIP 1/16W 100 OHM	0	0
RE49	AQ00185R	RES.CHIP 1/16W 470 OHM TAPE	0	0	RJ38	0790001R	CHIP RESISTOR RECJUMPER-1-16C16T1608	0	0
RE50	AQ00185R	RES.CHIP 1/16W 470 OHM TAPE	0	0	RJ39	0790001R	CHIP RESISTOR RECJUMPER-1-16C16T1608	0	0
RE51	0790024R	RES.CHIP 1/16W 100 OHM	0	0	RJ40	0790057R	RES.CHIP 1/16W 33K OHM	0	0
RE52	0790037R	RES.CHIP 1/16W 1.0K OHM	0	0	RJ42	AQ00149R	RES.CHIP 1/16W 22 OHM TAPE	0	0
RE53	0790061R	RES.CHIP 1/16W 56K OHM	0	0	RJ43	AQ00183R	RES.CHIP 1/16W 390 OHM TAPE	0	0
RE54	0790058R	RES.CHIP 1/16W 39K OHM	0	0	RJ44	0790001R	CHIP RESISTOR RECJUMPER-1-16C16T1608	0	0
RE55	0790024R	RES.CHIP 1/16W 100 OHM	0	0	RJ45	0790001R	CHIP RESISTOR RECJUMPER-1-16C16T1608	0	0
RE56	0790033R	RES.CHIP 1/16W 470 OHM	0	0	RJ46	0790001R	CHIP RESISTOR RECJUMPER-1-16C16T1608	0	0
RE58	AQ00192R	RES.CHIP 1/16W 820 OHM TAPE	0	0	RJ47	0790001R	CHIP RESISTOR RECJUMPER-1-16C16T1608	0	0
RE59	AQ00185R	RES.CHIP 1/16W 470 OHM TAPE	0	0	RJ48	0790001R	CHIP RESISTOR RECJUMPER-1-16C16T1608	0	0
RE60	0790024R	RES.CHIP 1/16W 100 OHM	0	0	RJ49	0790001R	CHIP RESISTOR RECJUMPER-1-16C16T1608	0	0
RE61	0790037R	RES.CHIP 1/16W 1.0K OHM	0	0	RJ50	0790001R	CHIP RESISTOR RECJUMPER-1-16C16T1608	0	0
RE62	0790024R	RES.CHIP 1/16W 100 OHM	0	0	RJ51	0790001R	CHIP RESISTOR RECJUMPER-1-16C16T1608	0	0
RE63	0790024R	RES.CHIP 1/16W 100 OHM	0	0	RJ53	0790057R	RES.CHIP 1/16W 33K OHM	0	0
RE64	0790024R	RES.CHIP 1/16W 100 OHM	0	0	RJ54	0790057R	RES.CHIP 1/16W 33K OHM	0	0
RE65	0790024R	RES.CHIP 1/16W 100 OHM	0	0	RJ57	0790059R	RES.CHIP 1/16W 47K OHM	0	0
RE66	0790024R	RES.CHIP 1/16W 100 OHM	0	0	RJ58	0790059R	RES.CHIP 1/16W 47K OHM	0	0
RE67	0790024R	RES.CHIP 1/16W 100 OHM	0	0	RJ59	0790042R	RES.CHIP 1/16W 2.2K OHM	0	0

PRODUCT SERVICE NOTE: Components marked with a ⚠ have special characteristics important to safety. Before replacing any of these components, read carefully, the PRODUCT SAFETY NOTICE of this Service Manual. Don't degrade the safety of the receiver through improper servicing.

SYMBOL NO.	PART NO.	PART DESCRIPTION	50"	60"	SYMBOL NO.	PART NO.	PART DESCRIPTION	50"	60"
RJ60	0790059R	RES.CHIP 1/16W 47K OHM	0	0	RV11	0790061R	RES.CHIP 1/16W 56K OHM	0	0
RJ62	0790024R	RES.CHIP 1/16W 100 OHM	0	0	RV12	0790059R	RES.CHIP 1/16W 47K OHM	0	0
RJ63	0790059R	RES.CHIP 1/16W 47K OHM	0	0	RV13	0790061R	RES.CHIP 1/16W 56K OHM	0	0
RJ64	0790024R	RES.CHIP 1/16W 100 OHM	0	0	RV14	0790024R	RES.CHIP 1/16W 100 OHM	0	0
RJ65	0790037R	RES.CHIP 1/16W 1.0K OHM	0	0	RV15	0790024R	RES.CHIP 1/16W 100 OHM	0	0
RJ66	0790024R	RES.CHIP 1/16W 100 OHM	0	0	RV16	0790037R	RES.CHIP 1/16W 1.0K OHM	0	0
RJ67	0790024R	RES.CHIP 1/16W 100 OHM	0	0	RV17	0790037R	RES.CHIP 1/16W 1.0K OHM	0	0
RJ68	0790024R	RES.CHIP 1/16W 100 OHM	0	0	RV20	0790037R	RES.CHIP 1/16W 1.0K OHM	0	0
RJ70	0790001R	CHIP RESISTOR RECJUMPER-1-16C16T1608	0	0	RV21	0790069R	RES.CHIP 1/16W 270K OHM	0	0
RJH8	0790055R	RES.CHIP 1/16W 22K OHM	0	0	RV22	0790069R	RES.CHIP 1/16W 270K OHM	0	0
RM03	0700049M	RES.-CARBON FLM 1/16W 4.7K-JB	0	0	RV23	0790047R	RES.CHIP 1/16W 5.6K OHM	0	0
RM04	0100065M	RES.-CARBON FLM 1/8W 1K-JB	0	0	RV24	0790047R	RES.CHIP 1/16W 5.6K OHM	0	0
RM06	0700041M	RES.-CARBON FLM 1/16W 1.0K-JB	0	0	RV25	0790059R	RES.CHIP 1/16W 47K OHM	0	0
RM07	0700043M	RES.-CARBON FLM 1/16W 1.5K-JB	0	0	RV26	0790059R	RES.CHIP 1/16W 47K OHM	0	0
RM08	0700046M	RES.-CARBON FLM 1/16W 2.7K-JB	0	0	RV27	0790037R	RES.CHIP 1/16W 1.0K OHM	0	0
RM09	0700049M	RES.-CARBON FLM 1/16W 4.7K-JB	0	0	RV28	0790051R	RES.CHIP 1/16W 10K OHM	0	0
RM13	AT03871M	1KOHM 1/2W RDS50 CARBON FILM RESISTOR	0	0	RV29	0790064R	RES.CHIP 1/16W 100K OHM	0	0
RM15	0700054M	RES.-CARBON FLM 1/16W 10K-JB	0	0	RV30	0790064R	RES.CHIP 1/16W 100K OHM	0	0
RM20	0100041M	RES.-CARBON FLM 1/8W 100-JB	0	0	RV31	0790064R	RES.CHIP 1/16W 100K OHM	0	0
RM21	0700041M	RES.-CARBON FLM 1/16W 1.0K-JB	0	0	RV32	0790064R	RES.CHIP 1/16W 100K OHM	0	0
RM22	0700041M	RES.-CARBON FLM 1/16W 1.0K-JB	0	0	RV33	0790051R	RES.CHIP 1/16W 10K OHM	0	0
RM23	0700064M	RES.-CARBON FLM 1/16W 56K-JB	0	0	RV34	0790051R	RES.CHIP 1/16W 10K OHM	0	0
RM24	0700045M	RES.-CARBON FLM 1/16W 2.2K-JB	0	0	RV35	0790053R	RES.CHIP 1/16W 15K OHM	0	0
RM25	0100123M	RES.-CARBON FLM 1/8W 270K-JB	0	0	RV36	0790024R	RES.CHIP 1/16W 100 OHM	0	0
RM26	0700047M	RES.-CARBON FLM 1/16W 3.3K-JB	0	0	RV37	AQ00164R	RES.CHIP 1/16W 75 OHM TAPE	0	0
RM27	0700064M	RES.-CARBON FLM 1/16W 56K-JB	0	0	RV38	0790069R	RES.CHIP 1/16W 270K OHM	0	0
RM28	0100123M	RES.-CARBON FLM 1/8W 270K-JB	0	0	RV39	0790069R	RES.CHIP 1/16W 270K OHM	0	0
RM29	0700041M	RES.-CARBON FLM 1/16W 1.0K-JB	0	0	RV40	AQ00164R	RES.CHIP 1/16W 75 OHM TAPE	0	0
RM30	0700041M	RES.-CARBON FLM 1/16W 1.0K-JB	0	0	RV41	AQ00164R	RES.CHIP 1/16W 75 OHM TAPE	0	0
RM31	0100041M	RES.-CARBON FLM 1/8W 100-JB	0	0	RV42	0790037R	RES.CHIP 1/16W 1.0K OHM	0	0
RM35	0700041M	RES.-CARBON FLM 1/16W 1.0K-JB	0	0	RV43	0790024R	RES.CHIP 1/16W 100 OHM	0	0
RM41	0700032M	RES.-CARBON FLM 1/16W 220-JB	0	0	RV44	0790047R	RES.CHIP 1/16W 5.6K OHM	0	0
RM42	0700041M	RES.-CARBON FLM 1/16W 1.0K-JB	0	0	RV45	0790047R	RES.CHIP 1/16W 5.6K OHM	0	0
RM43	0700059M	RES.-CARBON FLM 1/16W 27K-JB	0	0	RV46	0790024R	RES.CHIP 1/16W 100 OHM	0	0
RM46	0700059M	RES.-CARBON FLM 1/16W 27K-JB	0	0	RV47	0790024R	RES.CHIP 1/16W 100 OHM	0	0
RM47	0700049M	RES.-CARBON FLM 1/16W 4.7K-JB	0	0	RV48	AQ00164R	RES.CHIP 1/16W 75 OHM TAPE	0	0
RM48	0700032M	RES.-CARBON FLM 1/16W 220-JB	0	0	RV49	0790069R	RES.CHIP 1/16W 270K OHM	0	0
RM49	0700041M	RES.-CARBON FLM 1/16W 1.0K-JB	0	0	RV50	0790069R	RES.CHIP 1/16W 270K OHM	0	0
RM50	0100065M	RES.-CARBON FLM 1/8W 1K-JB	0	0	RV51	AQ00164R	RES.CHIP 1/16W 75 OHM TAPE	0	0
RM52	0700032M	RES.-CARBON FLM 1/16W 220-JB	0	0	RV52	AQ00164R	RES.CHIP 1/16W 75 OHM TAPE	0	0
RM53	0700046M	RES.-CARBON FLM 1/16W 2.7K-JB	0	0	RV53	0790024R	RES.CHIP 1/16W 100 OHM	0	0
RM54	0700049M	RES.-CARBON FLM 1/16W 4.7K-JB	0	0	RV54	0790047R	RES.CHIP 1/16W 5.6K OHM	0	0
RM55	0700054M	RES.-CARBON FLM 1/16W 10K-JB	0	0	RV55	0790047R	RES.CHIP 1/16W 5.6K OHM	0	0
RM56	0700029M	RES.-CARBON FLM 1/16W 150-JB	0	0	RV56	0790024R	RES.CHIP 1/16W 100 OHM	0	0
RM57	0100121M	RES.-CARBON FLM 1/8W 220K-JB	0	0	RV57	0790024R	RES.CHIP 1/16W 100 OHM	0	0
RM58	0700052M	RES.-CARBON FLM 1/16W 6.8K-JB	0	0	RV58	0790037R	RES.CHIP 1/16W 1.0K OHM	0	0
RM59	0700067M	RES.-CARBON FLM 1/16W 100K-JB	0	0	RV59	0790064R	RES.CHIP 1/16W 100K OHM	0	0
RM60	0700055M	RES.-CARBON FLM 1/16W 12K-JB	0	0	RV60	0790064R	RES.CHIP 1/16W 100K OHM	0	0
RM61	0700055M	RES.-CARBON FLM 1/16W 12K-JB	0	0	RV61	0790064R	RES.CHIP 1/16W 100K OHM	0	0
RM62	0700033M	RES.-CARBON FLM 1/16W 270-JB	0	0	RV62	0790064R	RES.CHIP 1/16W 100K OHM	0	0
RM63	0100121M	RES.-CARBON FLM 1/8W 220K-JB	0	0	RV63	0790064R	RES.CHIP 1/16W 100K OHM	0	0
RM64	0700042M	RES.-CARBON FLM 1/16W 1.2K-JB	0	0	RV64	0790037R	RES.CHIP 1/16W 1.0K OHM	0	0
RM65	0700054M	RES.-CARBON FLM 1/16W 10K-JB	0	0	RV65	0790028R	RES.CHIP 1/16W 220 OHM	0	0
RM66	0700051M	RES.-CARBON FLM 1/16W 5.6K-JB	0	0	RV66	0790037R	RES.CHIP 1/16W 1.0K OHM	0	0
RM67	0700063M	RES.-CARBON FLM 1/16W 47K-JB	0	0	RV67	0790028R	RES.CHIP 1/16W 220 OHM	0	0
RM68	AT03871M	1KOHM 1/2W RDS50 CARBON FILM RESISTOR	0	0	RV68	0790063R	RES.CHIP 1/16W 82K OHM	0	0
RM69	0700054M	RES.-CARBON FLM 1/16W 10K-JB	0	0	RV69	0790063R	RES.CHIP 1/16W 82K OHM	0	0
RM70	0700041M	RES.-CARBON FLM 1/16W 1.0K-JB	0	0	RV70	0790037R	RES.CHIP 1/16W 1.0K OHM	0	0
RM71	0700049M	RES.-CARBON FLM 1/16W 4.7K-JB	0	0	RV71	0790037R	RES.CHIP 1/16W 1.0K OHM	0	0
RM72	AT03871M	1KOHM 1/2W RDS50 CARBON FILM RESISTOR	0	0	RV72	AQ00163R	RES.CHIP 1/16W 68 OHM TAPE	0	0
RM73	0700049M	RES.-CARBON FLM 1/16W 4.7K-JB	0	0	RV73	AQ00163R	RES.CHIP 1/16W 68 OHM TAPE	0	0
RM74	AT03871M	1KOHM 1/2W RDS50 CARBON FILM RESISTOR	0	0	RV74	AQ00163R	RES.CHIP 1/16W 68 OHM TAPE	0	0
RM75	0700049M	RES.-CARBON FLM 1/16W 4.7K-JB	0	0	RV75	0790034R	RES.CHIP 1/16W 560 OHM	0	0
RM77	0700059M	RES.-CARBON FLM 1/16W 27K-JB	0	0	RV76	0790034R	RES.CHIP 1/16W 560 OHM	0	0
RM78	0700059M	RES.-CARBON FLM 1/16W 27K-JB	0	0	RV77	0790034R	RES.CHIP 1/16W 560 OHM	0	0
RV01	0790061R	RES.CHIP 1/16W 56K OHM	0	0	RV78	0790034R	RES.CHIP 1/16W 560 OHM	0	0
RV02	0790057R	RES.CHIP 1/16W 33K OHM	0	0	RV79	0790034R	RES.CHIP 1/16W 560 OHM	0	0
RV03	0790024R	RES.CHIP 1/16W 100 OHM	0	0	RV80	0790034R	RES.CHIP 1/16W 560 OHM	0	0
RV04	0790037R	RES.CHIP 1/16W 1.0K OHM	0	0	RV81	0790034R	RES.CHIP 1/16W 560 OHM	0	0
RV05	0790037R	RES.CHIP 1/16W 1.0K OHM	0	0	RV82	0790034R	RES.CHIP 1/16W 560 OHM	0	0
RV06	0790037R	RES.CHIP 1/16W 1.0K OHM	0	0	RV83	0790034R	RES.CHIP 1/16W 560 OHM	0	0
RV07	0790001R	CHIP RESISTOR RECJUMPER-1-16C16T1608	0	0	RV84	0790024R	RES.CHIP 1/16W 100 OHM	0	0
RV08	0790069R	RES.CHIP 1/16W 270K OHM	0	0	RV85	0790024R	RES.CHIP 1/16W 100 OHM	0	0
RV09	0790069R	RES.CHIP 1/16W 270K OHM	0	0	RV86	0790024R	RES.CHIP 1/16W 100 OHM	0	0
RV10	0790059R	RES.CHIP 1/16W 47K OHM	0	0	RV95	0790047R	RES.CHIP 1/16W 5.6K OHM	0	0

PRODUCT SERVICE NOTE: Components marked with a ⚠ have special characteristics important to safety. Before replacing any of these components, read carefully, the PRODUCT SAFETY NOTICE of this Service Manual. Don't degrade the safety of the receiver through improper servicing.

SYMBOL NO.	PART NO.	PART DESCRIPTION	50"	60"	SYMBOL NO.	PART NO.	PART DESCRIPTION	50"	60"
RV96	0790024R	RES.CHIP 1/16W 100 OHM	0	0	RW64	0790059R	RES.CHIP 1/16W 47K OHM	0	0
RV97	0790047R	RES.CHIP 1/16W 5.6K OHM	0	0	RW65	0790055R	RES.CHIP 1/16W 22K OHM	0	0
RV98	0790024R	RES.CHIP 1/16W 100 OHM	0	0	RW66	0790024R	RES.CHIP 1/16W 100 OHM	0	0
RVA0	0790047R	RES.CHIP 1/16W 5.6K OHM	0	0	RW67	0790035R	RES.CHIP 1/16W 680 OHM	0	0
RVA1	0790047R	RES.CHIP 1/16W 5.6K OHM	0	0	RW68	0790041R	RES.CHIP 1/16W 1.8K OHM	0	0
RVA2	0790024R	RES.CHIP 1/16W 100 OHM	0	0	RW69	0790037R	RES.CHIP 1/16W 1.0K OHM	0	0
RVA7	0790001R	CHIP RESISTOR RECJUMPER-1-16C16T1608	0	0	RW70	0790024R	RES.CHIP 1/16W 100 OHM	0	0
RVA8	0790001R	CHIP RESISTOR RECJUMPER-1-16C16T1608	0	0	RW71	0790041R	RES.CHIP 1/16W 1.8K OHM	0	0
RVA9	0790001R	CHIP RESISTOR RECJUMPER-1-16C16T1608	0	0	RW72	0790001R	CHIP RESISTOR RECJUMPER-1-16C16T1608	0	0
RVC0	0790001R	CHIP RESISTOR RECJUMPER-1-16C16T1608	0	0	RW76	AQ00164R	RES.CHIP 1/16W 75 OHM TAPE	0	0
RVC9	AQ00164R	RES.CHIP 1/16W 75 OHM TAPE	0	0	RW77	AQ00164R	RES.CHIP 1/16W 75 OHM TAPE	0	0
RVE0	AQ00164R	RES.CHIP 1/16W 75 OHM TAPE	0	0	RW78	AQ00164R	RES.CHIP 1/16W 75 OHM TAPE	0	0
RVE1	AQ00164R	RES.CHIP 1/16W 75 OHM TAPE	0	0	RW82	0790024R	RES.CHIP 1/16W 100 OHM	0	0
RVF1	0790024R	RES.CHIP 1/16W 100 OHM	0	0	RW83	0790024R	RES.CHIP 1/16W 100 OHM	0	0
RVF2	0790024R	RES.CHIP 1/16W 100 OHM	0	0	RW84	0790024R	RES.CHIP 1/16W 100 OHM	0	0
RVF3	0790024R	RES.CHIP 1/16W 100 OHM	0	0	RW85	0790024R	RES.CHIP 1/16W 100 OHM	0	0
RW01	0790024R	RES.CHIP 1/16W 100 OHM	0	0	RW86	0790024R	RES.CHIP 1/16W 100 OHM	0	0
RW02	0790047R	RES.CHIP 1/16W 5.6K OHM	0	0	RW87	0790024R	RES.CHIP 1/16W 100 OHM	0	0
RW03	0790024R	RES.CHIP 1/16W 100 OHM	0	0	RW88	0790037R	RES.CHIP 1/16W 1.0K OHM	0	0
RW04	0790047R	RES.CHIP 1/16W 5.6K OHM	0	0	RW89	0790001R	CHIP RESISTOR RECJUMPER-1-16C16T1608	0	0
RW05	0790024R	RES.CHIP 1/16W 100 OHM	0	0	RW90	0790001R	CHIP RESISTOR RECJUMPER-1-16C16T1608	0	0
RW06	0790037R	RES.CHIP 1/16W 1.0K OHM	0	0	RW91	0790001R	CHIP RESISTOR RECJUMPER-1-16C16T1608	0	0
RW07	AQ00164R	RES.CHIP 1/16W 75 OHM TAPE	0	0	RW92	AQ00164R	RES.CHIP 1/16W 75 OHM TAPE	0	0
RW08	AQ00164R	RES.CHIP 1/16W 75 OHM TAPE	0	0	RW93	AQ00164R	RES.CHIP 1/16W 75 OHM TAPE	0	0
RW09	AQ00164R	RES.CHIP 1/16W 75 OHM TAPE	0	0	RW94	AQ00164R	RES.CHIP 1/16W 75 OHM TAPE	0	0
RW12	0790024R	RES.CHIP 1/16W 100 OHM	0	0	RX06	0790024R	RES.CHIP 1/16W 100 OHM	0	0
RW13	0790024R	RES.CHIP 1/16W 100 OHM	0	0	RX07	0790024R	RES.CHIP 1/16W 100 OHM	0	0
RW14	0790024R	RES.CHIP 1/16W 100 OHM	0	0	RX08	0790024R	RES.CHIP 1/16W 100 OHM	0	0
RW15	0790042R	RES.CHIP 1/16W 2.2K OHM	0	0	RX09	0790024R	RES.CHIP 1/16W 100 OHM	0	0
RW16	0790001R	CHIP RESISTOR RECJUMPER-1-16C16T1608	0	0	RX10	0790024R	RES.CHIP 1/16W 100 OHM	0	0
RW17	0790024R	RES.CHIP 1/16W 100 OHM	0	0	RX12	0790037R	RES.CHIP 1/16W 1.0K OHM	0	0
RW18	0790024R	RES.CHIP 1/16W 100 OHM	0	0	RX13	0790037R	RES.CHIP 1/16W 1.0K OHM	0	0
RW19	AQ00194R	RES.CHIP 1/16W 1.0K OHM TAPE	0	0	RX14	0790037R	RES.CHIP 1/16W 1.0K OHM	0	0
RW20	AQ00193R	RES.CHIP 1/16W 910 OHM TAPE	0	0	RX15	0790037R	RES.CHIP 1/16W 1.0K OHM	0	0
RW21	0790047R	RES.CHIP 1/16W 5.6K OHM	0	0	RX16	0790024R	RES.CHIP 1/16W 100 OHM	0	0
RW22	0790037R	RES.CHIP 1/16W 1.0K OHM	0	0	RX19	0790024R	RES.CHIP 1/16W 100 OHM	0	0
RW23	0790037R	RES.CHIP 1/16W 1.0K OHM	0	0	RX20	0790024R	RES.CHIP 1/16W 100 OHM	0	0
RW24	0790047R	RES.CHIP 1/16W 5.6K OHM	0	0	RX21	0790024R	RES.CHIP 1/16W 100 OHM	0	0
RW25	0790024R	RES.CHIP 1/16W 100 OHM	0	0	RX22	0790024R	RES.CHIP 1/16W 100 OHM	0	0
RW26	0790042R	RES.CHIP 1/16W 2.2K OHM	0	0	RX23	0790024R	RES.CHIP 1/16W 100 OHM	0	0
RW27	0790001R	CHIP RESISTOR RECJUMPER-1-16C16T1608	0	0	RX25	0790037R	RES.CHIP 1/16W 1.0K OHM	0	0
RW28	0790024R	RES.CHIP 1/16W 100 OHM	0	0	RX26	0790037R	RES.CHIP 1/16W 1.0K OHM	0	0
RW29	0790024R	RES.CHIP 1/16W 100 OHM	0	0	RX27	0790037R	RES.CHIP 1/16W 1.0K OHM	0	0
RW30	AQ00194R	RES.CHIP 1/16W 1.0K OHM TAPE	0	0	RX28	0790037R	RES.CHIP 1/16W 1.0K OHM	0	0
RW31	AQ00193R	RES.CHIP 1/16W 910 OHM TAPE	0	0	RX30	0790001R	CHIP RESISTOR RECJUMPER-1-16C16T1608	0	0
RW32	0790047R	RES.CHIP 1/16W 5.6K OHM	0	0	RX32	0790024R	RES.CHIP 1/16W 100 OHM	0	0
RW33	0790037R	RES.CHIP 1/16W 1.0K OHM	0	0	RX33	0790024R	RES.CHIP 1/16W 100 OHM	0	0
RW34	0790037R	RES.CHIP 1/16W 1.0K OHM	0	0	RX34	0790024R	RES.CHIP 1/16W 100 OHM	0	0
RW35	0790047R	RES.CHIP 1/16W 5.6K OHM	0	0	RX35	0790024R	RES.CHIP 1/16W 100 OHM	0	0
RW36	0790056R	RES.CHIP 1/16W 27K OHM	0	0	RX36	0790024R	RES.CHIP 1/16W 100 OHM	0	0
RW37	0790064R	RES.CHIP 1/16W 100K OHM	0	0	RX37	0790024R	RES.CHIP 1/16W 100 OHM	0	0
RW38	0790024R	RES.CHIP 1/16W 100 OHM	0	0	RX38	0790024R	RES.CHIP 1/16W 100 OHM	0	0
RW40	AQ00185R	RES.CHIP 1/16W 470 OHM TAPE	0	0	RX45	0790037R	RES.CHIP 1/16W 1.0K OHM	0	0
RW41	AQ00191R	RES.CHIP 1/16W 750 OHM TAPE	0	0	RX47	0790024R	RES.CHIP 1/16W 100 OHM	0	0
RW42	AQ00191R	RES.CHIP 1/16W 750 OHM TAPE	0	0	RX48	0790024R	RES.CHIP 1/16W 100 OHM	0	0
RW43	0790024R	RES.CHIP 1/16W 100 OHM	0	0	RX49	0790024R	RES.CHIP 1/16W 100 OHM	0	0
RW44	0790043R	RES.CHIP 1/16W 2.7K OHM	0	0	RX50	0790024R	RES.CHIP 1/16W 100 OHM	0	0
RW46	0790036R	RES.CHIP 1/16W 820 OHM	0	0	RX54	0790037R	RES.CHIP 1/16W 1.0K OHM	0	0
RW47	0790024R	RES.CHIP 1/16W 100 OHM	0	0	RX55	0790037R	RES.CHIP 1/16W 1.0K OHM	0	0
RW48	0790043R	RES.CHIP 1/16W 2.7K OHM	0	0	RX56	0790037R	RES.CHIP 1/16W 1.0K OHM	0	0
RW49	0790034R	RES.CHIP 1/16W 560 OHM	0	0	RX57	0790041R	RES.CHIP 1/16W 1.8K OHM	0	0
RW50	0790047R	RES.CHIP 1/16W 5.6K OHM	0	0	RX58	0790041R	RES.CHIP 1/16W 1.8K OHM	0	0
RW51	0790059R	RES.CHIP 1/16W 47K OHM	0	0	RX59	0790041R	RES.CHIP 1/16W 1.8K OHM	0	0
RW52	0790059R	RES.CHIP 1/16W 47K OHM	0	0	RX60	AQ00195R	RES.CHIP 1/16W 1.1K OHM TAPE	0	0
RW53	0790024R	RES.CHIP 1/16W 100 OHM	0	0	RX61	AQ00195R	RES.CHIP 1/16W 1.1K OHM TAPE	0	0
RW54	0790035R	RES.CHIP 1/16W 680 OHM	0	0	RX62	AQ00195R	RES.CHIP 1/16W 1.1K OHM TAPE	0	0
RW55	AQ00205R	RES.CHIP 1/16W 2.7K OHM TAPE	0	0	RX66	0790037R	RES.CHIP 1/16W 1.0K OHM	0	0
RW56	AQ00196R	RES.CHIP 1/16W 1.2K OHM TAPE	0	0	RX67	0790037R	RES.CHIP 1/16W 1.0K OHM	0	0
RW57	0790024R	RES.CHIP 1/16W 100 OHM	0	0	RX68	0790037R	RES.CHIP 1/16W 1.0K OHM	0	0
RW58	0790041R	RES.CHIP 1/16W 1.8K OHM	0	0	RX69	0790041R	RES.CHIP 1/16W 1.8K OHM	0	0
RW59	0790001R	CHIP RESISTOR RECJUMPER-1-16C16T1608	0	0	RX70	0790041R	RES.CHIP 1/16W 1.8K OHM	0	0
RW60	0790024R	RES.CHIP 1/16W 100 OHM	0	0	RX71	0790041R	RES.CHIP 1/16W 1.8K OHM	0	0
RW61	0790044R	RES.CHIP 1/16W 3.3K OHM	0	0	RX72	AQ00195R	RES.CHIP 1/16W 1.1K OHM TAPE	0	0
RW62	0790034R	RES.CHIP 1/16W 560 OHM	0	0	RX73	AQ00195R	RES.CHIP 1/16W 1.1K OHM TAPE	0	0
RW63	0790047R	RES.CHIP 1/16W 5.6K OHM	0	0	RX74	AQ00195R	RES.CHIP 1/16W 1.1K OHM TAPE	0	0

PRODUCT SERVICE NOTE: Components marked with a ⚠ have special characteristics important to safety. Before replacing any of these components, read carefully, the PRODUCT SAFETY NOTICE of this Service Manual. Don't degrade the safety of the receiver through improper servicing.

SYMBOL NO.	PART NO.	PART DESCRIPTION	50"	60"	SYMBOL NO.	PART NO.	PART DESCRIPTION	50"	60"
RX76	0790051R	RES.CHIP 1/16W 10K OHM	0	0	RX89	0790051R	RES.CHIP 1/16W 10K OHM	0	0
RX81	0790051R	RES.CHIP 1/16W 10K OHM	0	0	RX90	0790001R	CHIP RESISTOR RECJUMPER-1-16C16T1608	0	0
RX82	0790061R	RES.CHIP 1/16W 56K OHM	0	0	RX91	0790001R	CHIP RESISTOR RECJUMPER-1-16C16T1608	0	0
RX83	0790051R	RES.CHIP 1/16W 10K OHM	0	0	RX92	0790001R	CHIP RESISTOR RECJUMPER-1-16C16T1608	0	0
RX84	0790051R	RES.CHIP 1/16W 10K OHM	0	0	RX93	0790001R	CHIP RESISTOR RECJUMPER-1-16C16T1608	0	0
RX85	0790061R	RES.CHIP 1/16W 56K OHM	0	0	RX94	0790001R	CHIP RESISTOR RECJUMPER-1-16C16T1608	0	0
RX86	0790051R	RES.CHIP 1/16W 10K OHM	0	0	RX95	0790001R	CHIP RESISTOR RECJUMPER-1-16C16T1608	0	0
RX87	0790051R	RES.CHIP 1/16W 10K OHM	0	0	RX96	0790001R	CHIP RESISTOR RECJUMPER-1-16C16T1608	0	0
RX88	0790061R	RES.CHIP 1/16W 56K OHM	0	0	RX97	0790001R	CHIP RESISTOR RECJUMPER-1-16C16T1608	0	0
RX89	0790051R	RES.CHIP 1/16W 10K OHM	0	0	RX98	0790001R	CHIP RESISTOR RECJUMPER-1-16C16T1608	0	0
RX90	0790001R	CHIP RESISTOR RECJUMPER-1-16C16T1608	0	0	RXA0	0790024R	RES.CHIP 1/16W 100 OHM	0	0
RX91	0790001R	CHIP RESISTOR RECJUMPER-1-16C16T1608	0	0	RXA1	0790037R	RES.CHIP 1/16W 1.0K OHM	0	0
RX92	0790001R	CHIP RESISTOR RECJUMPER-1-16C16T1608	0	0	RXA2	0790037R	RES.CHIP 1/16W 1.0K OHM	0	0
RX93	0790001R	CHIP RESISTOR RECJUMPER-1-16C16T1608	0	0	RXA3	0790051R	RES.CHIP 1/16W 10K OHM	0	0
RX94	0790001R	CHIP RESISTOR RECJUMPER-1-16C16T1608	0	0	RXA5	0790051R	RES.CHIP 1/16W 10K OHM	0	0
RX95	0790001R	CHIP RESISTOR RECJUMPER-1-16C16T1608	0	0	RXA6	0790037R	RES.CHIP 1/16W 1.0K OHM	0	0
RX96	0790001R	CHIP RESISTOR RECJUMPER-1-16C16T1608	0	0	RXA7	0790051R	RES.CHIP 1/16W 10K OHM	0	0
RX97	0790001R	CHIP RESISTOR RECJUMPER-1-16C16T1608	0	0	RY01	0790055R	RES.CHIP 1/16W 22K OHM	0	0
RX98	0790001R	CHIP RESISTOR RECJUMPER-1-16C16T1608	0	0	RY02	0790056R	RES.CHIP 1/16W 27K OHM	0	0
RXA0	0790024R	RES.CHIP 1/16W 100 OHM	0	0	RY03	0790024R	RES.CHIP 1/16W 100 OHM	0	0
RXA1	0790037R	RES.CHIP 1/16W 1.0K OHM	0	0	RY04	0790042R	RES.CHIP 1/16W 2.2K OHM	0	0
RXA2	0790037R	RES.CHIP 1/16W 1.0K OHM	0	0	RY05	0790037R	RES.CHIP 1/16W 1.0K OHM	0	0
RXA3	0790051R	RES.CHIP 1/16W 10K OHM	0	0	RY06	AQ00174R	RES.CHIP 1/16W 180 OHM TAPE	0	0
RXA5	0790051R	RES.CHIP 1/16W 10K OHM	0	0	RY07	AQ00192R	RES.CHIP 1/16W 820 OHM TAPE	0	0
RXA6	0790037R	RES.CHIP 1/16W 1.0K OHM	0	0	RY08	0790044R	RES.CHIP 1/16W 3.3K OHM	0	0
RXA7	0790051R	RES.CHIP 1/16W 10K OHM	0	0	RY09	0790061R	RES.CHIP 1/16W 56K OHM	0	0
RY01	0790055R	RES.CHIP 1/16W 22K OHM	0	0	RY10	0790055R	RES.CHIP 1/16W 22K OHM	0	0
RY02	0790056R	RES.CHIP 1/16W 27K OHM	0	0	RY11	0790052R	RES.CHIP 1/16W 12K OHM	0	0
RY03	0790024R	RES.CHIP 1/16W 100 OHM	0	0	RY12	0790041R	RES.CHIP 1/16W 1.8K OHM	0	0
RY04	0790042R	RES.CHIP 1/16W 2.2K OHM	0	0	RY13	0790024R	RES.CHIP 1/16W 100 OHM	0	0
RY05	0790037R	RES.CHIP 1/16W 1.0K OHM	0	0	RY14	0790039R	RES.CHIP 1/16W 1.5K OHM	0	0
RY06	AQ00174R	RES.CHIP 1/16W 180 OHM TAPE	0	0	RY15	0790028R	RES.CHIP 1/16W 220 OHM	0	0
RY07	AQ00192R	RES.CHIP 1/16W 820 OHM TAPE	0	0	RY16	0790068R	RES.CHIP 1/16W 220K OHM	0	0
RY08	0790044R	RES.CHIP 1/16W 3.3K OHM	0	0	RY17	0790059R	RES.CHIP 1/16W 47K OHM	0	0
RY09	0790061R	RES.CHIP 1/16W 56K OHM	0	0	RY18	0790056R	RES.CHIP 1/16W 27K OHM	0	0
RY10	0790055R	RES.CHIP 1/16W 22K OHM	0	0	RY19	0790051R	RES.CHIP 1/16W 10K OHM	0	0
RY11	0790052R	RES.CHIP 1/16W 12K OHM	0	0	RY20	0790033R	RES.CHIP 1/16W 470 OHM	0	0
RY12	0790041R	RES.CHIP 1/16W 1.8K OHM	0	0	RY21	0790046R	RES.CHIP 1/16W 4.7K OHM	0	0
RY13	0790024R	RES.CHIP 1/16W 100 OHM	0	0	RY22	0790043R	RES.CHIP 1/16W 2.7K OHM	0	0
RY14	0790039R	RES.CHIP 1/16W 1.5K OHM	0	0	RY23	0790028R	RES.CHIP 1/16W 220 OHM	0	0
RY15	0790028R	RES.CHIP 1/16W 220 OHM	0	0	RY24	0790001R	CHIP RESISTOR RECJUMPER-1-16C16T1608	0	0
RY16	0790068R	RES.CHIP 1/16W 220K OHM	0	0	RY25	0790024R	RES.CHIP 1/16W 100 OHM	0	0
RY17	0790059R	RES.CHIP 1/16W 47K OHM	0	0	RY26	0790024R	RES.CHIP 1/16W 100 OHM	0	0
RY18	0790056R	RES.CHIP 1/16W 27K OHM	0	0	RY27	0790064R	RES.CHIP 1/16W 100K OHM	0	0
RY19	0790051R	RES.CHIP 1/16W 10K OHM	0	0	RY28	0790032R	RES.CHIP 1/16W 390 OHM	0	0
RY20	0790033R	RES.CHIP 1/16W 470 OHM	0	0	RY29	0790037R	RES.CHIP 1/16W 1.0K OHM	0	0
RY21	0790046R	RES.CHIP 1/16W 4.7K OHM	0	0	RY32	0790047R	RES.CHIP 1/16W 5.6K OHM	0	0
RY22	0790043R	RES.CHIP 1/16W 2.7K OHM	0	0	RY33	0790011R	RES.CHIP 1/16W 10 OHM	0	0
RY23	0790028R	RES.CHIP 1/16W 220 OHM	0	0	RY34	0790042R	RES.CHIP 1/16W 2.2K OHM	0	0
RY24	0790001R	CHIP RESISTOR RECJUMPER-1-16C16T1608	0	0	RY35	AQ00187R	RES.CHIP 1/16W 560 OHM TAPE	0	0
RY25	0790024R	RES.CHIP 1/16W 100 OHM	0	0	RY36	AQ00214R	RES.CHIP 1/16W 5.6K OHM	0	0
RY26	0790024R	RES.CHIP 1/16W 100 OHM	0	0	RY37	0790058R	RES.CHIP 1/16W 39K OHM	0	0
RY27	0790064R	RES.CHIP 1/16W 100K OHM	0	0	RY38	0790056R	RES.CHIP 1/16W 27K OHM	0	0
RY28	0790032R	RES.CHIP 1/16W 390 OHM	0	0	RY39	0790024R	RES.CHIP 1/16W 100 OHM	0	0
RY29	0790037R	RES.CHIP 1/16W 1.0K OHM	0	0	RY40	0790037R	RES.CHIP 1/16W 1.0K OHM	0	0
RY32	0790047R	RES.CHIP 1/16W 5.6K OHM	0	0	RY41	AQ00205R	RES.CHIP 1/16W 2.7K OHM TAPE	0	0
RY33	0790011R	RES.CHIP 1/16W 10 OHM	0	0	RY42	AQ00196R	RES.CHIP 1/16W 1.2K OHM TAPE	0	0
RY34	0790042R	RES.CHIP 1/16W 2.2K OHM	0	0	RY43	0790024R	RES.CHIP 1/16W 100 OHM	0	0
RY35	AQ00187R	RES.CHIP 1/16W 560 OHM TAPE	0	0	RY44	0790042R	RES.CHIP 1/16W 2.2K OHM	0	0
RY36	AQ00214R	RES.CHIP 1/16W 5.6K OHM	0	0	RY45	0790011R	RES.CHIP 1/16W 10 OHM	0	0
RY37	0790058R	RES.CHIP 1/16W 39K OHM	0	0	RY46	0790042R	RES.CHIP 1/16W 2.2K OHM	0	0
RY38	0790056R	RES.CHIP 1/16W 27K OHM	0	0	RY47	0790034R	RES.CHIP 1/16W 560 OHM	0	0
RY39	0790024R	RES.CHIP 1/16W 100 OHM	0	0	RY48	0790047R	RES.CHIP 1/16W 5.6K OHM	0	0
RY40	0790037R	RES.CHIP 1/16W 1.0K OHM	0	0	RY49	0790058R	RES.CHIP 1/16W 39K OHM	0	0
RY41	AQ00205R	RES.CHIP 1/16W 2.7K OHM TAPE	0	0	RY50	0790051R	RES.CHIP 1/16W 10K OHM	0	0
RY42	AQ00196R	RES.CHIP 1/16W 1.2K OHM TAPE	0	0	RY51	0790024R	RES.CHIP 1/16W 100 OHM	0	0
RY43	0790024R	RES.CHIP 1/16W 100 OHM	0	0	RZ35	0790001R	CHIP RESISTOR RECJUMPER-1-16C16T1608	0	0
RY44	0790042R	RES.CHIP 1/16W 2.2K OHM	0	0	RZ37	0790033R	RES.CHIP 1/16W 470 OHM	0	0
RY45	0790011R	RES.CHIP 1/16W 10 OHM	0	0	RZ38	0790033R	RES.CHIP 1/16W 470 OHM	0	0
RY46	0790042R	RES.CHIP 1/16W 2.2K OHM	0	0	RZ39	0790033R	RES.CHIP 1/16W 470 OHM	0	0
RY47	0790034R	RES.CHIP 1/16W 560 OHM	0	0	RZ41	0790024R	RES.CHIP 1/16W 100 OHM	0	0
RY48	0790047R	RES.CHIP 1/16W 5.6K OHM	0	0	RZ42	0790024R	RES.CHIP 1/16W 100 OHM	0	0
RY49	0790058R	RES.CHIP 1/16W 39K OHM	0	0	RZ43	0790024R	RES.CHIP 1/16W 100 OHM	0	0
RY50	0790051R	RES.CHIP 1/16W 10K OHM	0	0	RZ44	0790019R	RES.CHIP 1/16W 47 OHM	0	0
RY51	0790024R	RES.CHIP 1/16W 100 OHM	0	0	RZ45	0790019R	RES.CHIP 1/16W 47 OHM	0	0
RX76	0790051R	RES.CHIP 1/16W 10K OHM	0	0	RZ46	0790019R	RES.CHIP 1/16W 47 OHM	0	0
RX81	0790051R	RES.CHIP 1/16W 10K OHM	0	0	RZ47	0790024R	RES.CHIP 1/16W 100 OHM	0	0
RX82	0790061R	RES.CHIP 1/16W 56K OHM	0	0					
RX83	0790051R	RES.CHIP 1/16W 10K OHM	0	0			**RELAYS, SWITCHES**		
RX84	0790051R	RES.CHIP 1/16W 10K OHM	0	0	⚠ S901	FJ00142	RELAY ALKS329	0	0
RX85	0790061R	RES.CHIP 1/16W 56K OHM	0	0	SM01	FE10402R	PUSH SWITCH SKQNAB	0	0
RX86	0790051R	RES.CHIP 1/16W 10K OHM	0	0	SM02	FE10402R	PUSH SWITCH SKQNAB	0	0
RX87	0790051R	RES.CHIP 1/16W 10K OHM	0	0	SM03	FE10402R	PUSH SWITCH SKQNAB	0	0
RX88	0790061R	RES.CHIP 1/16W 56K OHM	0	0	SM04	FE10402R	PUSH SWITCH SKQNAB	0	0

PRODUCT SERVICE NOTE: Components marked with a ⚠ have special characteristics important to safety. Before replacing any of these components, read carefully, the PRODUCT SAFETY NOTICE of this Service Manual. Don't degrade the safety of the receiver through improper servicing.

SYMBOL NO.	PART NO.	PART DESCRIPTION	50"	60"
SM05	FE10402R	PUSH SWITCH SKQNAB	0	0
SM06	FE10402R	PUSH SWITCH SKQNAB	0	0
SM07	FE10402R	PUSH SWITCH SKQNAB	0	0
SS01	FH00171	SWITCH SSCTA11900	0	0
SS02	FH00171	SWITCH SSCTA11900	0	0
		SS01 and SS02 - A.K.A. Door Switch and Lamp Switch (View Lamp Switch PWB)		
		TRANSFORMER		
⚠ T901	BT02201	POWER TRANSFORMER (LC37)	0	0
		FILTERS, CRYSTALS		
X001	BP01311R	CSTLS16M0X	0	0
X002	BP01313R	CSTLS8M00G53	0	0
X601	BE00391R	SMD LC FILTER MEA3216L50R0	0	0
X602	BE00391R	SMD LC FILTER MEA3216L50R0	0	0
X603	BE00412R	3218 CHIP LC FILTER	0	0
X604	BL01181R	CSCTE16M0V51-R0	0	0
X606	BE00412R	3218 CHIP LC FILTER		0
X607	BE00412R	3218 CHIP LC FILTER		0
X701	BE00412R	3218 CHIP LC FILTER	0	
X702	BE00412R	3218 CHIP LC FILTER	0	
X703	BE00412R	3218 CHIP LC FILTER	0	
X704	BE00412R	3218 CHIP LC FILTER	0	
X705	BE00412R	3218 CHIP LC FILTER	0	
X800	BE00412R	3218 CHIP LC FILTER		0
X801	BE00412R	3218 CHIP LC FILTER		0
X802	BE00412R	3218 CHIP LC FILTER		0
X803	BE00412R	3218 CHIP LC FILTER		0
X804	BE00412R	3218 CHIP LC FILTER		0
X901	AJ00832	ERZV10D241	0	0
XV01	BJ00642	COIL (LC FILTER 6M LPF)	0	0
XV02	BJ00642	COIL (LC FILTER 6M LPF)	0	0
XY01	BJ00642	COIL (LC FILTER 6M LPF)	0	0
XY02	BJ00642	COIL (LC FILTER 6M LPF)	0	0
XY03	BP01191	OSCILLATOR 20HHZ HC-49US	0	0
XY04	2168771	VFL-CSB503F30	0	0
XY05	BP01241	OSCILLATOR 3.58 49U	0	0
XY06	2168771	VFL-CSB503F30	0	0
XY07	BP01241	OSCILLATOR 3.58 49U	0	0
		SPEAKERS		
U401	GK00911	**5cm Tweeter**	0	0
U402	GK00557	**12cm Woofer**	0	0
U403	GK01221	**10cm SubWoofer**	0	0
U404	GK00911	**5cm Tweeter**	0	0
U405	GK00557	**12cm Wooferr**	0	0
U406	GK01221	**10cm SubWoofer**	0	0
		MISCELLANEOUS		
#	**UX21511**	LC3X LAMP ASY	0	0
#	KR02911	50V500 SCREEN ASY	0	
#	KR02912	60V500 SCREEN ASY		0
#	UE22331	50V500 OPTICAL B.ASY	0	
#	UE22332	60V500 OPTICAL B.ASY		0
#	UE22371	LC37 CONTROL B.ASY	0	
#	UE22372	60V500 CONTROL B.ASY		0
#	UQ33771	5V500 FINAL ASY	0	
#	UQ33772	60V500 FINAL ASY		0
#012	QD36002	60V500 LOW CABINET ASY		0
#021	KS06401	50V500 MIRROR COVER ASY	0	
#022	KS06402	60V500 MIRROR COVE.ASY		0
#031	NT03101	50V500 FRAME ASY	0	
#032	NT03102	60V500 FRAME ASY		0
#100	PH33161	CONTROL PANEL V500	0	0
#150	ME03441	LOW UPPER COVER V500	0	0
#170	NA66773	LOW CABI METAL C V50	0	0
#200	PH33041	FRONT TRIM 50V500	0	
#202	PH33311	FRONT TRIM 60V500		0
#220	PC05731	POWER BUTTON V500	0	0
#230	MN05981	CONTROL BLOCK CORD COVER	0	0
#300	QD36551	LOW REAR COVER 50V500	0	
#302	QD36531	LOW REAR COVER 60V500		0
#310	QD36541	LOW SIDE COVER R 60V500		0
#312	QD36542	LOW SIDE COVER L 60V500		0
#410	PH32981	FRONT COVER 50V500	0	
#412	PH33301	FRONT COVER 60V500		0
#430	PH33171	CONTROL DOOR V500	0	0
#510	NJ08041	SP BAFFLE R V500	0	0
#512	NJ08042	SP BAFFLE L V500	0	0
#520	NJ08051	SP BOX COVER V500	0	0
#525	MQ01517	50V500 SPEAKER CUSHION	0	0
#610	NJ08061	WOOFER BAFFLE R V500	0	0
#620	NJ08062	WOOFER BAFFLE L V500	0	0
#630	NJ08071	WOOFER BOX COV R V500	0	0
#640	NJ08072	WOOFER BOX COV L V500	0	0
#666	PH33551	FRONT SPACER BOX 60V500		0
#686	MQ01516	50V500 SPEAKER CUSHION	0	0

SYMBOL NO.	PART NO.	PART DESCRIPTION	50"	60"
#810	PH33031	LAMP COVER V500	0	
#811	PH33032	LC3X LAMP COVER 60		0
EFF1	2908629	2P PH CONNE.L=220	0	0
EFF2	EF03233S	5P CONNE. L=270	0	0
EFI	EF23641	4P EH-SMP CONNECTOR 220MM	0	0
EFS	EF20973	13P XA CONNECTOR 220MM	0	0
EL1	EF23681	5P SMP CONNECTOR 1950/2100MM	0	0
EL2	EF22831	CON.03SM-FAS1007-22-L550	0	0
ER1	EF23691	4P SMP CONNECTOR 1950/2100MM	0	0
ER2	EF22851	CON.02SM-FAS1007-22-L550	0	0
ESP2	EF23351	7P XA CONNECTOR 1200MM	0	0
⚠ FE91	2721351	FUSE HOLDER	0	0
⚠ FE94	2721351	FUSE HOLDER	0	0
HJ01	2791754R	CONDENSER WITH 3 TERMINAL 100PF	0	0
HJ02	2791754R	CONDENSER WITH 3 TERMINAL 100PF	0	0
HJ03	2791754R	CONDENSER WITH 3 TERMINAL 100PF	0	0
IAA2	2004751	IC TA8200AH	0	0
J001	ES00511	JACK HSJ1002-01-1020	0	0
JA01	ER00911	JACK LPR6520-G0XX 3P	0	0
JM01	EU00841	TAP-S.JACK	0	0
JX01	ES00403	JACK LAP5120-0203F US5P Y/C0P	0	0
JX02	ES00403	JACK LAP5120-0203F US5P Y/C0P	0	0
JX03	ES00351	JACK LAP5120-0101F US9P Y/C3P	0	0
P7A0	EA00562R	FPC CONNECTOR		0
P7A2	EA00064R	SP SMT PH CONNECTOR POST		0
P7F0	EA00562R	FPC CONNECTOR		0
P7X0	EA00562R	FPC CONNECTOR		0
PA	ED02801	2P PLUG PIN	0	0
PAN	2902262	PLUG PIN SUB MINI 3P	0	0
PB01	EA00561R	FPC CONNECTOR	0	
PBT	EA01271R	1.5MM PITCH 11P CONNECTOR BASE SM3A	0	0
PCD	EA01273R	PLUG 13BP1R5H WHITE T-SM3A	0	0
PDE	EA00062R	3P SMT PH CONNECTOR POST	0	0
PDJ	EA00066R	7P SMT PH CONNECTOR POST	0	
PDJ1	ED04301	PLUG(DVI-D)	0	0
PDP	EA00069R	10P SMT PH CONNECTOR POST	0	0
PET	ED03216	20P 2.5MM PITCH CONNECTOR TAC-L20X-A3	0	0
PFF1A	2959051	PIN POST (2P)	0	0
PFF1B	2675281	PIN POST (PH 2P)		0
PFF2A	ED02823	2.5MM PITCH 5P XA PLUG (H)	0	0
PFF2B	ED02823	2.5MM PITCH 5P XA PLUG (H)	0	0
PFI	2902243	PLUG PIN SUB MINI 4P	0	0
PFI2	2902263	PLUG PIN SUB MINI 4P	0	0
PFS	ED02832	2.5MM PITCH 13P XA PLUG (H)	0	0
PFSH1	2959059	PLUG PH PIN POST 10P	0	0
PFT1	ED02829	2.5MM PITCH 11P XA PLUG (H)	0	0
PG01	EA00561R	FPC CONNECTOR		0
PJIG	2902246	PLUG PIN SUB MINI 7P	0	
PJJ	2675286	PH CONNE. 7P	0	0
PPA	ED00385	PLUG 6P LOCK 2.5MM JST	0	0
PPA1	ED00383	PLUG 4P JST2.5ROCK	0	0
PPAB	ED00385	PLUG 6P LOCK 2.5MM JST	0	0
PPD	EA00068R	9P SMT PH CONNECTOR POST	0	0
PPF2	2902262	PLUG PIN SUB MINI 3P	0	0
PPF3	2902264	PLUG PIN SUB MINI 5P	0	0
PPL	2674281	3P B-PLUG PIN	0	0
PPS1	ED00395	PLUG 15P LOCK 2.5MM JST	0	0
PPS2	ED00388	PLUG 9P LOCK 2.5MM JST	0	0
PPS3	ED00382R	3P XA PLUG TAPING	0	
PPW	2959054	PINPOST 5P PH	0	0
PPW1	2675284	PIN POST (PH 5P)	0	0
PPW2	2675284	PIN POST (PH 5P)	0	0
PR01	EA00561R	FPC CONNECTOR	0	
PRDH	EA00061R	2P SMT PH CONNECTOR POST	0	
PRST	2959051	PIN POST (2P)	0	0
PSA1	2959053	5P POST PIN 4P TYPE PH	0	0
PSA2	2902265	PLUG PIN SUB MINI 6P	0	0
PSC1	EA01248R	1.5MM PITCH 9P CONNECTOR BASE SM3	0	0
PSC2	EA01246R	1.5MM PITCH 7P CONNECTOR BASE SM3	0	0
PSC3	EA00932R	0.5MM PITCH FPC CONNECTOR FH12-50S-0.5SV	0	0
PSD	EA00073R	13P SMT PH CONNECTOR POST	0	
PSL	2959055	CONNECTOR-6P(PH)	0	0
PSP1	ED00387	PLUG 8P LOCK 2.5MM JST	0	0
PSP2	ED00386	PLUG 7P LOCK 2.5MM JST	0	0
PST1	ED04331U	2.54MM PITCH 50P B TO B CONNECTOR SOCKET	0	0
PST2	ED04341U	2.54MM PITCH 50P B TO B CONNECTOR PLUG	0	0
	EK01182	50 pin flat ribbon		
		OWNER ASSY & ACCESSORIES		
E203	FQ00021	DRY BATTERY(R6P-AA)	0	0
E301	HL01829	REMOTE CONTROL UNIT	0	0
N201	QR57021	LC37 INST BOOK #1	0	0
N202	H463201	LCD REAR PTV WARRANTY CARD	0	0
N203	H463211	(F) LCD REAR PTV WARRANTY CARD	0	0
N211	H463136	EASY GRAPHIC GUIDE LC37/B	0	0
N214	H463172	QUICK R/C GUIDE LC37/B	0	0

GS00506 Lamp Fan
GS00931 LCD Drive Fan
FH00051U Thermal Switch

EXPLODED VIEW

50V500 Drawing 1

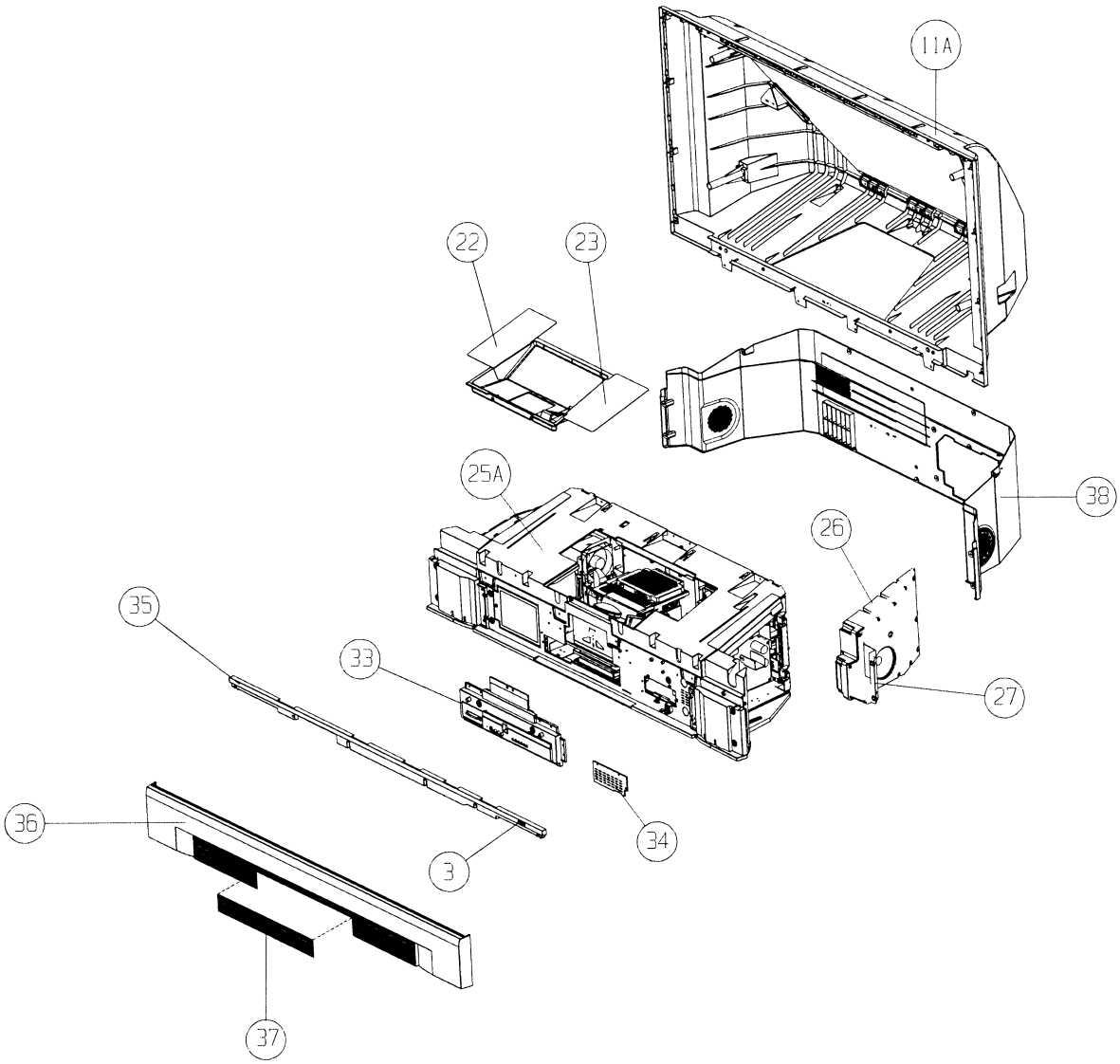

NOTES: Some parts may appear different than those shown in the exploded view. When ordering, refer to the replacement parts list for the correct part number. The circled numbers correspond to the parts list shown on page 142.

EXPLODED VIEW
50V500 Drawing 2

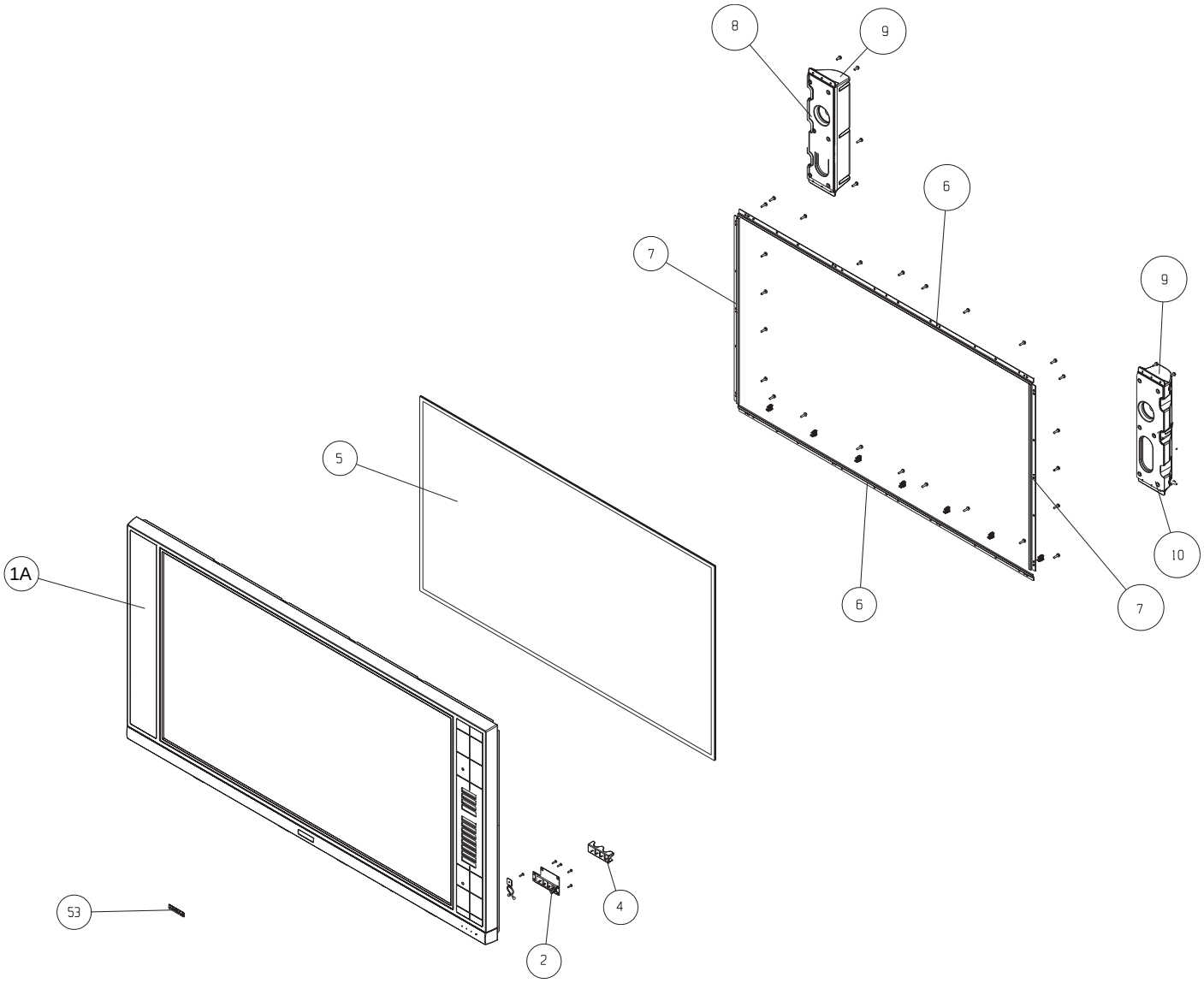

NOTES: Some parts may appear different than those shown in the exploded view. When ordering, refer to the replacement parts list for the correct part number. The circled numbers correspond to the parts list shown on page 142.

EXPLODED VIEW

50V500 Drawing 3

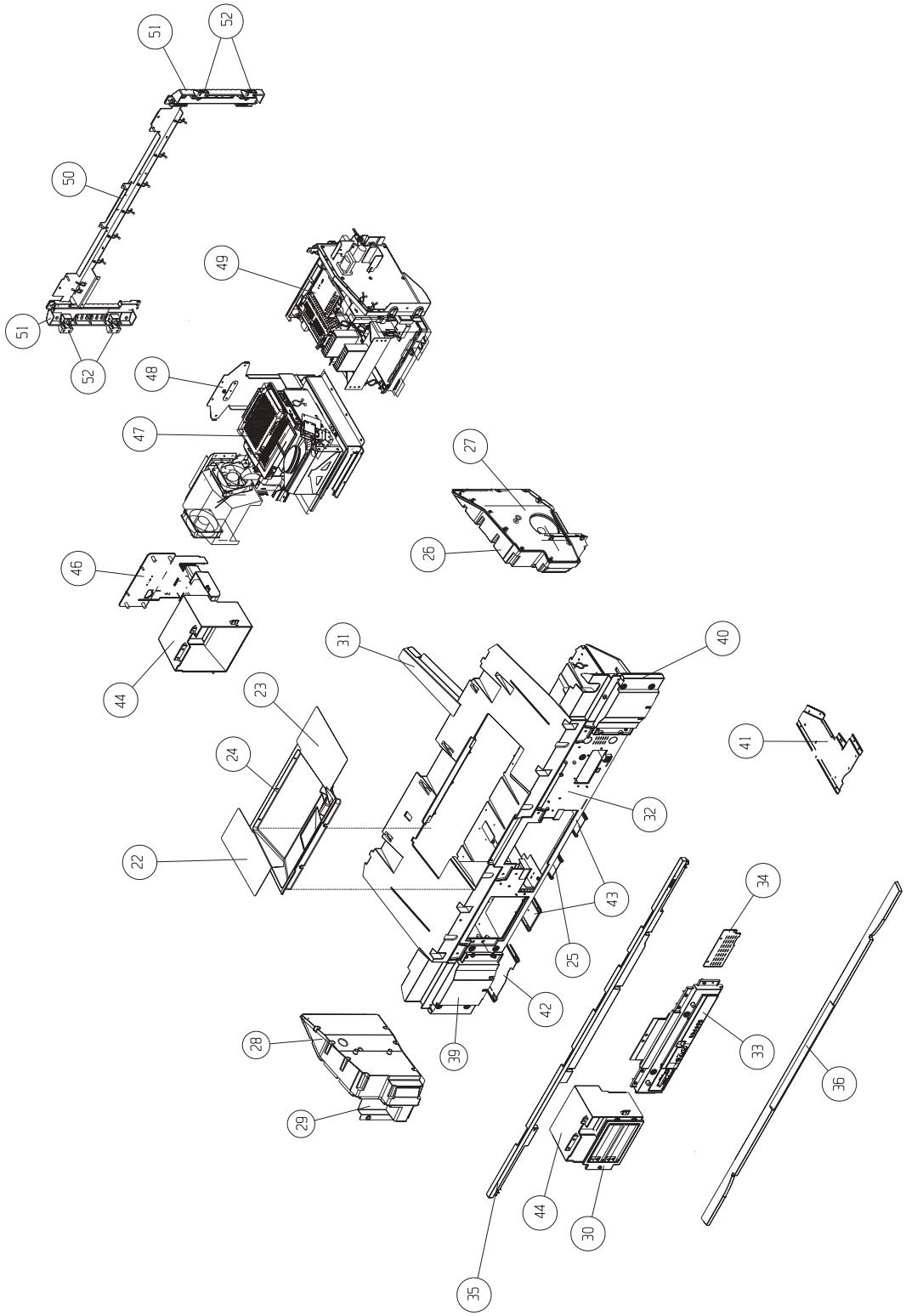

NOTES: Some parts may appear different than those shown in the exploded view. When ordering, refer to the replacement parts list for the correct part number. The circled numbers correspond to the parts list shown on page 142.

EXPLODED VIEW
50V500 Drawing 4

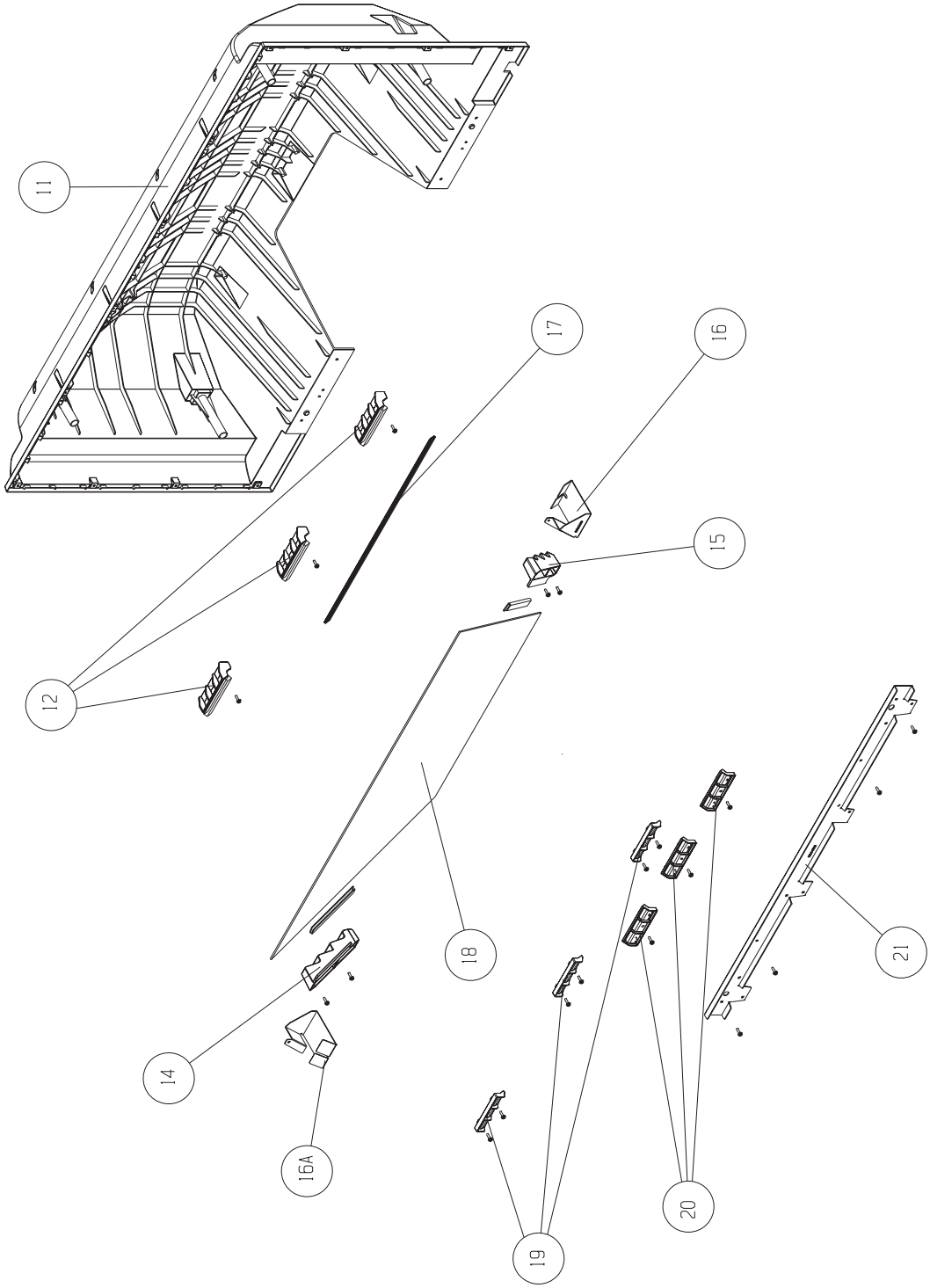

NOTES: Some parts may appear different than those shown in the exploded view. When ordering, refer to the replacement parts list for the correct part number. The circled numbers correspond to the parts list shown on page 142.

EXPLODED VIEW PARTS LIST

50V500 EXPLODED VIEW PARTS LIST

No	PART No	DESCRIPTION	QTY
1A	NT03101	50V500 FRAME ASSY	1
2	JT24171	CONTROL PWB ASSY	1
3	PC05731	POWER BUTTON V500	1
4	KQ03291	LED LENS V500	1
5	KR02911	50V SCREEN ASSY	1
6	NA66781	SCR FIX MTL H 50V500	2
7	NA66791	SCR FIX MTL V 50V500	2
8	NJ08042	SP BAFFLE L V500	1
9	NJ08051	SP BOX COVER V500	2
10	NJ08041	SP BAFFLE R V500	1
11A	KS06401	50V500 MIRROR COVER ASSY	1
11	QD36141	MIRROR COVER 50V500	1
12	NJ07801	MIRROR FIX PART UP 50V500	3
14	NJ07822	MIRROR FIX PART L 50V500	1
15	NJ07821	MIRROR FIX PART R 50V500	1
16A	NA69012	V500 MIRR SIDE MTL L	1
16	NA69011	V500 MIRR SIDE MTL R	1
17	MN06151	V500 MIRR LOW SPACER	1
18	KS06581	1ST MIRROR 50V500	1
19	NJ07831	MIRROR FIX PART UP B 50V500	3
20	NJ07811	MIRROR FIX PART LOW 50V500	3
21	NA64502	MIRR FIX LO MTL 50V	1
22	MN05841	V500 BARRIER L	1
23	MN05831	V500 BARRIER R	1
24	ME03441	LOW UPPER COVER V500	1
25A	QD36001	50V LOW CABINET ASSY	1
25	NA66741	BTM RAIL FIX MTL C50	1
26	NJ08072	WOOFER BOX COV L V500	1
27	NJ08061	WOOFER BAFFLE R V500	1
28	NJ08071	WOOFER BOX COV R V500	1
29	NJ08062	WOOFER BAFFLE L V500	1
30	PH33033	Lamp Cover 50V	1
31	ME03592	V500 BARRIER SIDE R	1
32	QD36151	LOW CABINET 50V500	1
33	PH33161	CONTROL PANEL V500	1
34	PH33441	LO CABI COVER F V500	1
35	PH33041	FRONT TRIM 50V500	1
36	PH32981	FRONT COVER 50V500	1
37	PH33173	CONTROL DOOR V500	1
39	NJ07852	LO CABI SIDE L 50V500	1
40	NJ07851	LO CABI SIDE R 50V500	1
41	NA66732	BTM SIDE FIX MTL L50	1
42	NA66731	BTM SIDE FIX MTL R50	1
43	NA64181	BTM RAIL FIX MTL 50V500	2
44	NJ08181	LAMP DUCT B LC3X	1
46	NJ08171	LAMP DUCT A LC3X	1
47	**UX22201D**	LC37 OPTICAL BLOCK ASSY	1
48	NA66774	LOW CABI METAL C V500	1
49	UE22341	LC37 CHASSIS BLOCK ASSY	1
50	NA66763	LOW CABI METAL B V500	1
51	NJ08261	V500 CABI BRACKET 2	2
52	NJ08271	V500 CABI BRACKET 3	4
53	PU00801	ULTRAVISION BADGE	1
38	**QD36551**	**Lower Rear Cover 50"**	

EXPLODED VIEW
60V500A Drawing 1

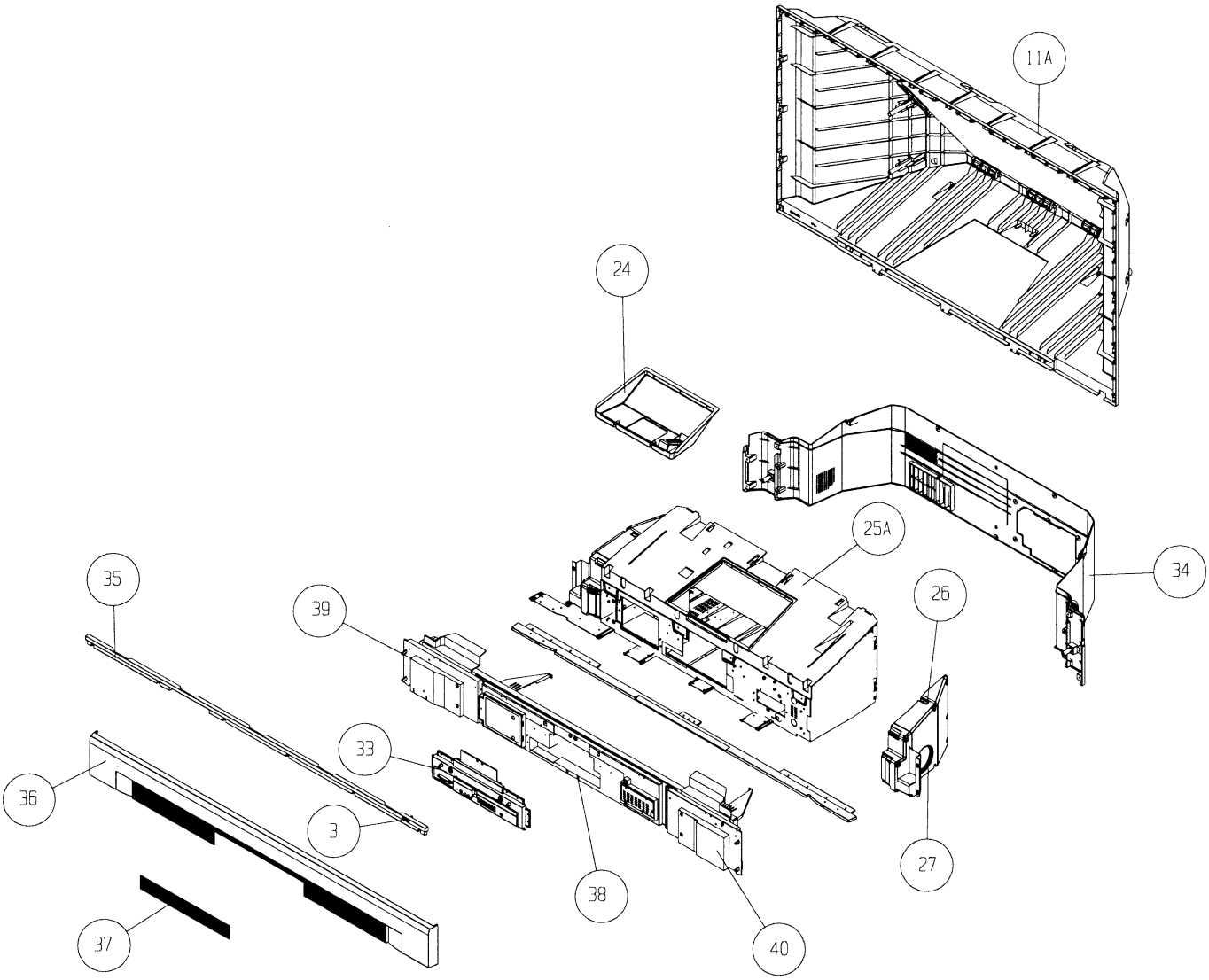

NOTES: Some parts may appear different than those shown in the exploded view. When ordering, refer to the replacement parts list for the correct part number. The circled numbers correspond to the parts list shown on page 147.

EXPLODED VIEW
60V500A Drawing 2

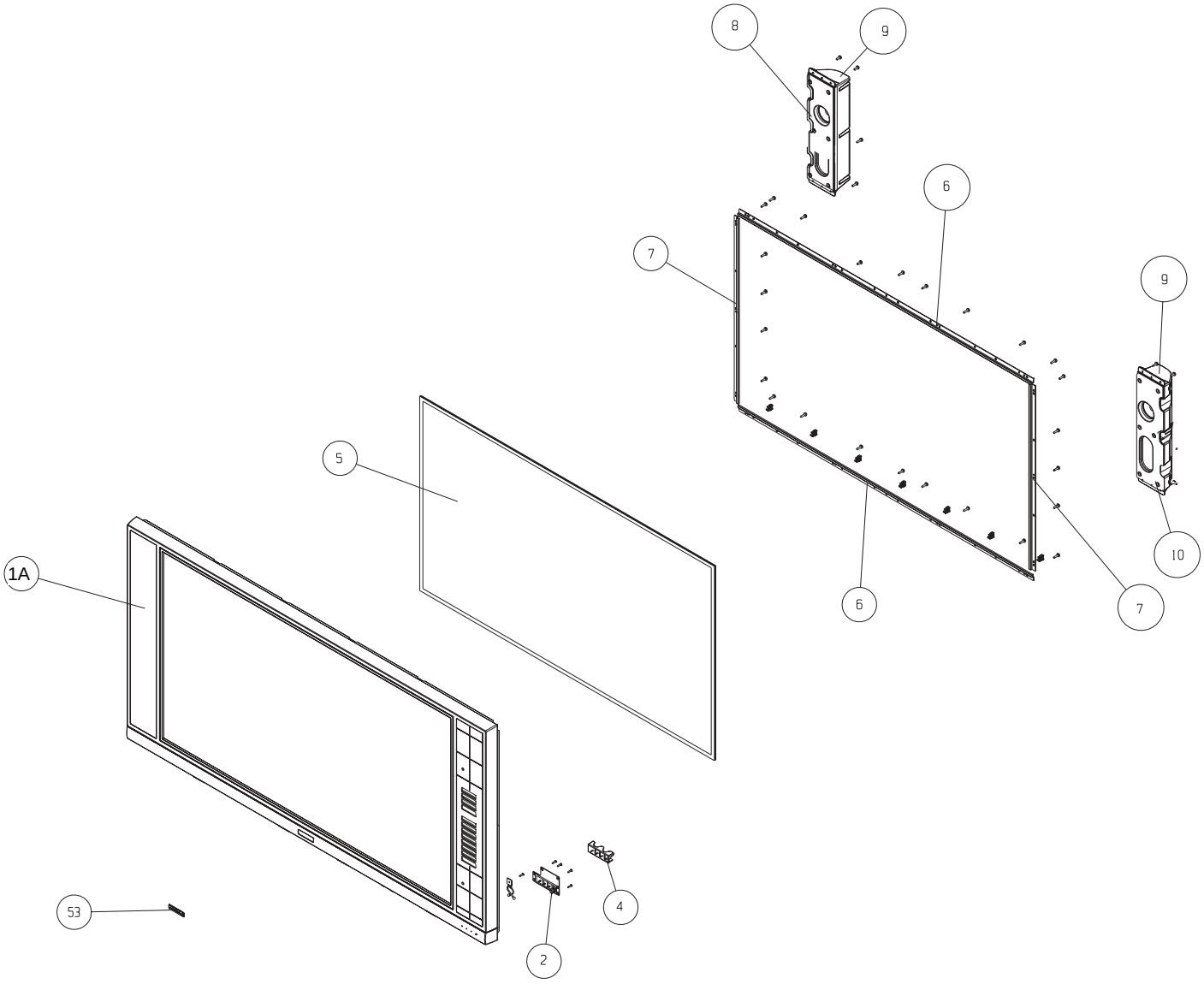

NOTES: Some parts may appear different than those shown in the exploded view. When ordering, refer to the replacement parts list for the correct part number. The circled numbers correspond to the parts list shown on page 147.

EXPLODED VIEW

60V500A Drawing 3

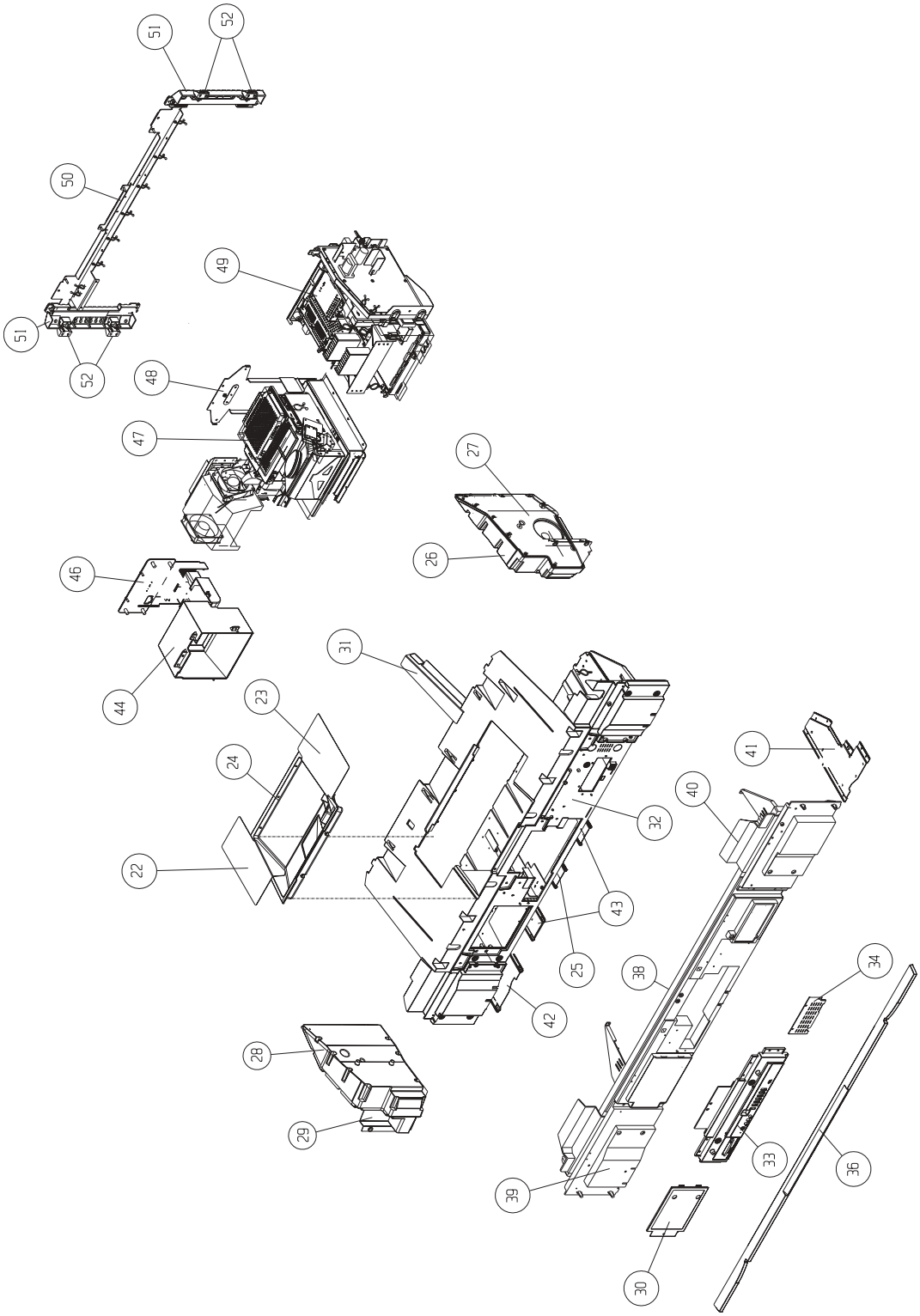

NOTES: Some parts may appear different than those shown in the exploded view. When ordering, refer to the replacement parts list for the correct part number. The circled numbers correspond to the parts list shown on page 147.

EXPLODED VIEW

60V500A Drawing 1

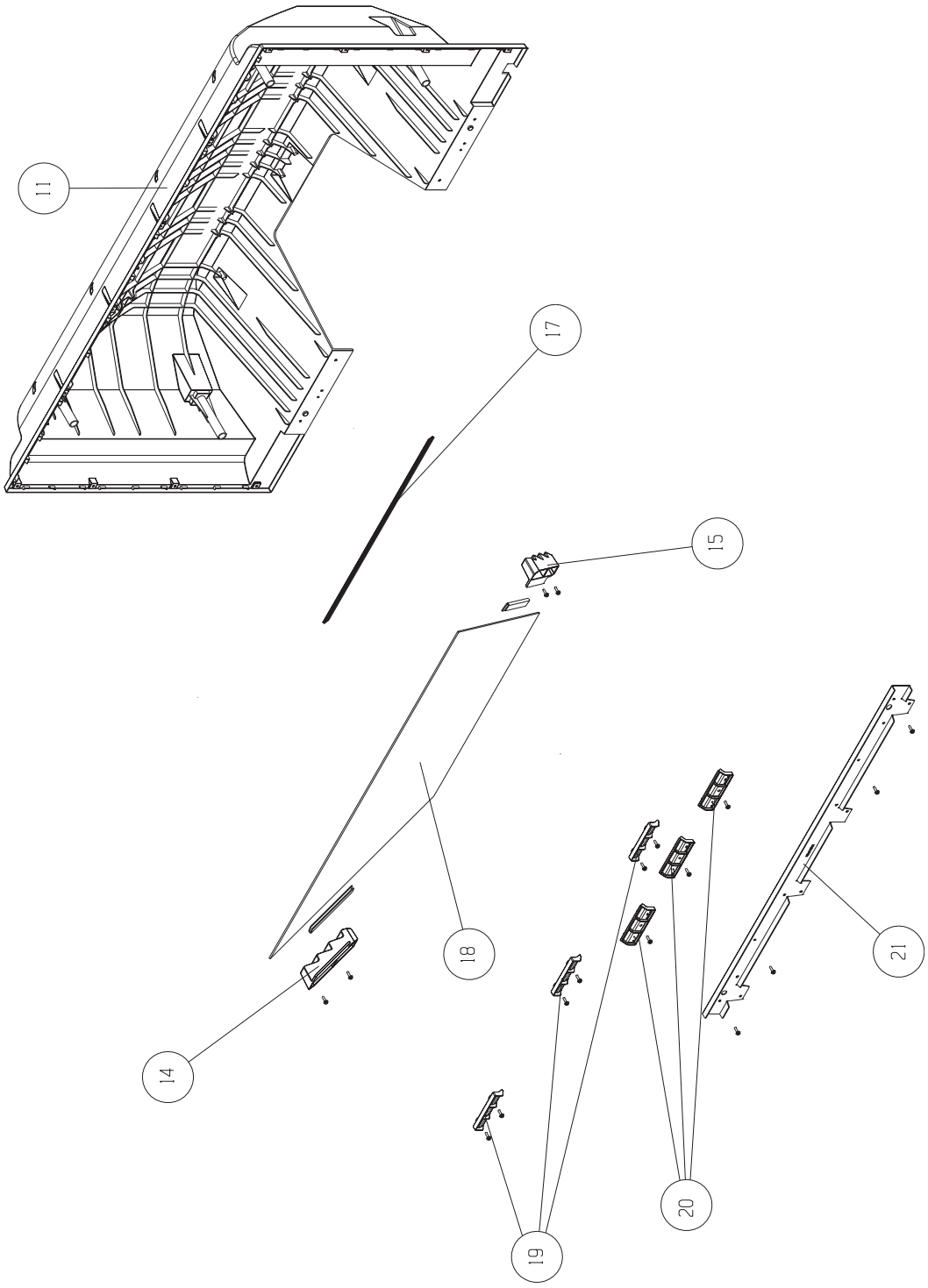

NOTES: Some parts may appear different than those shown in the exploded view. When ordering, refer to the replacement parts list for the correct part number. The circled numbers correspond to the parts list shown on page 147.

EXPLODED VIEW PARTS LIST

60V500A EXPLODED VIEW PARTS LIST

No	PART No	DESCRIPTION	QTY
1A	NT03104	60V500 FRAME ASSY	1
2	**JT24174**	CONTROL PWB ASSY	1
3	PC05731	POWER BUTTON V500	1
4	KQ03291	LED LENS V500	1
5	KR02912	60V SCREEN ASSY	1
6	NA66782	SCR FIX MTL H 60V500	2
7	NA66792	SCR FIX MTL V 60V500	2
8	NJ08042	SP BAFFLE L V500	1
9	NJ08051	SP BOX COVER V500	2
10	NJ08041	SP BAFFLE R V500	1
11A	KS06402	60V500 MIRROR COVER ASSY	1
11	QD36521	MIRROR COVER 60V500	1
14	NJ07822	MIRROR FIX PART L 50V500	1
15	NJ07821	MIRROR FIX PART R 50V500	1
17	MN06152	60V500 MIRR LOW SPACER	1
18	KS06582	1ST MIRROR 60V500	1
19	NJ07831	MIRROR FIX PART UP B 50V500	3
20	NJ07811	MIRROR FIX PART LOW 50V500	3
21	NA67801	BACK COVER BOTTOM METAL	1
22	MN05841	V500 BARRIER L	1
23	MN05831	V500 BARRIER R	1
24	ME03441	LOW UPPER COVER V500	1
25A	QD36002	60V LOW CABINET ASSY	1
25	NA68501	BTM RAIL MTL C60	1
26	NJ08072	WOOFER BOX COV L V500	1
27	NJ08061	WOOFER BAFFLE R V500	1
28	NJ08071	WOOFER BOX COV R V500	1
29	NJ08062	WOOFER BAFFLE L V500	1
30	PH33032	LAMP COVER	1
31	ME03592	V500 BARRIER SIDE R	1
32	QD36152	**Lower Cabinet 60V500A**	1
33	PH33162	CONTROL PANEL V500	1
34	**QD36531**	**Lower Rear Cover 60"**	1
35	PH33311	**Front Trim 60V500A**	1
36	PH33301	**Front Cover 60V500A**	1
37	PH33173	CONTROL DOOR V500	1
38	PH33551	FRONT SPACER BOX 60V	
39	NJ08001	LO CABI SIDE L 60V500	1
40	NJ08002	LO CABI SIDE R 60V500	1
41	NA68512	BTM SIDE FIX MTL R60	1
42	NA68511	BTM SIDE FIX MTL L60	1
43	NA64191	BTM RAIL MTL C60	2
44	NJ08181	LAMP DUCT B LC3X	1
46	NJ08171	LAMP DUCT A LC3X	1
47	**UX22203D**	60V500 OPTICAL BLOCK ASSY	1
48	NA66774	LOW CABI METAL C V500	1
49	**UE22344**	60V CHASSIS BLOCK ASSY	1
50	NA66763	LOW CABI METAL B V500	1
51	NJ08261	V500 CABI BRACKET 2	2
52	NJ08271	V500 CABI BRACKET 3	4
53	PU00801	ULTRAVISION BADGE	1

PRINTED CIRCUIT BOARD

Control CS

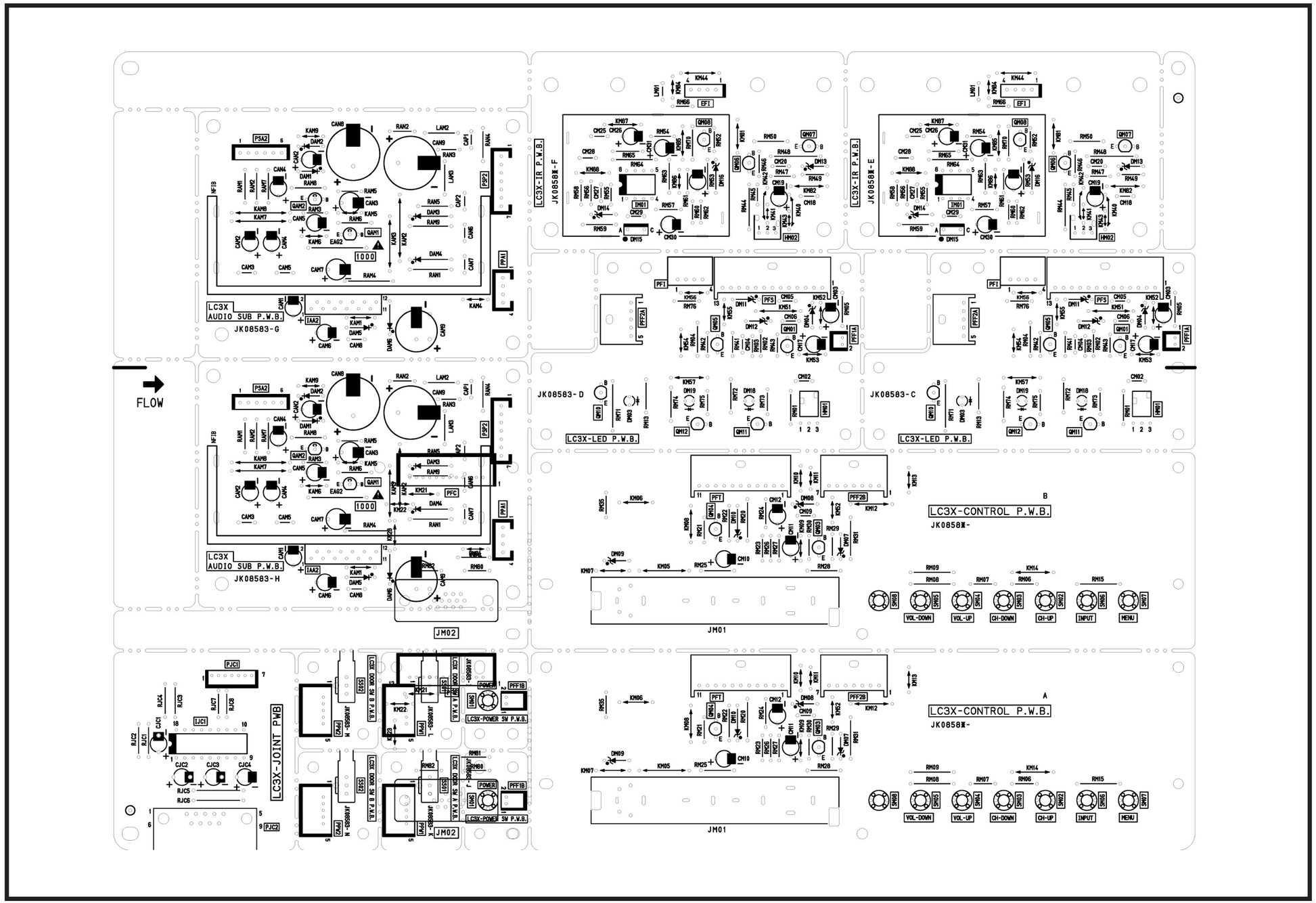

PRINTED CIRCUIT BOARD

Control SS

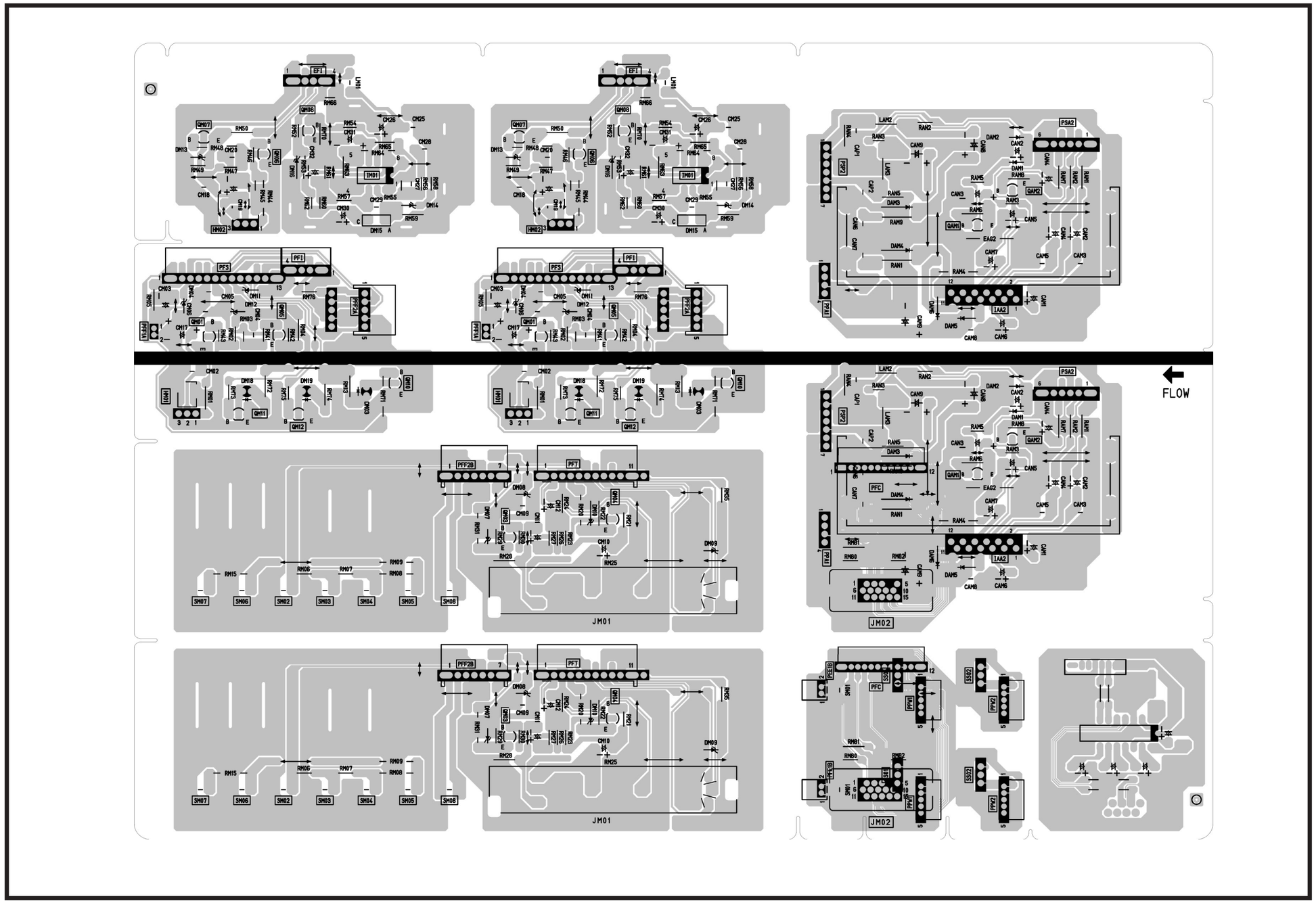

PRINTED CIRCUIT BOARD

Drive CS

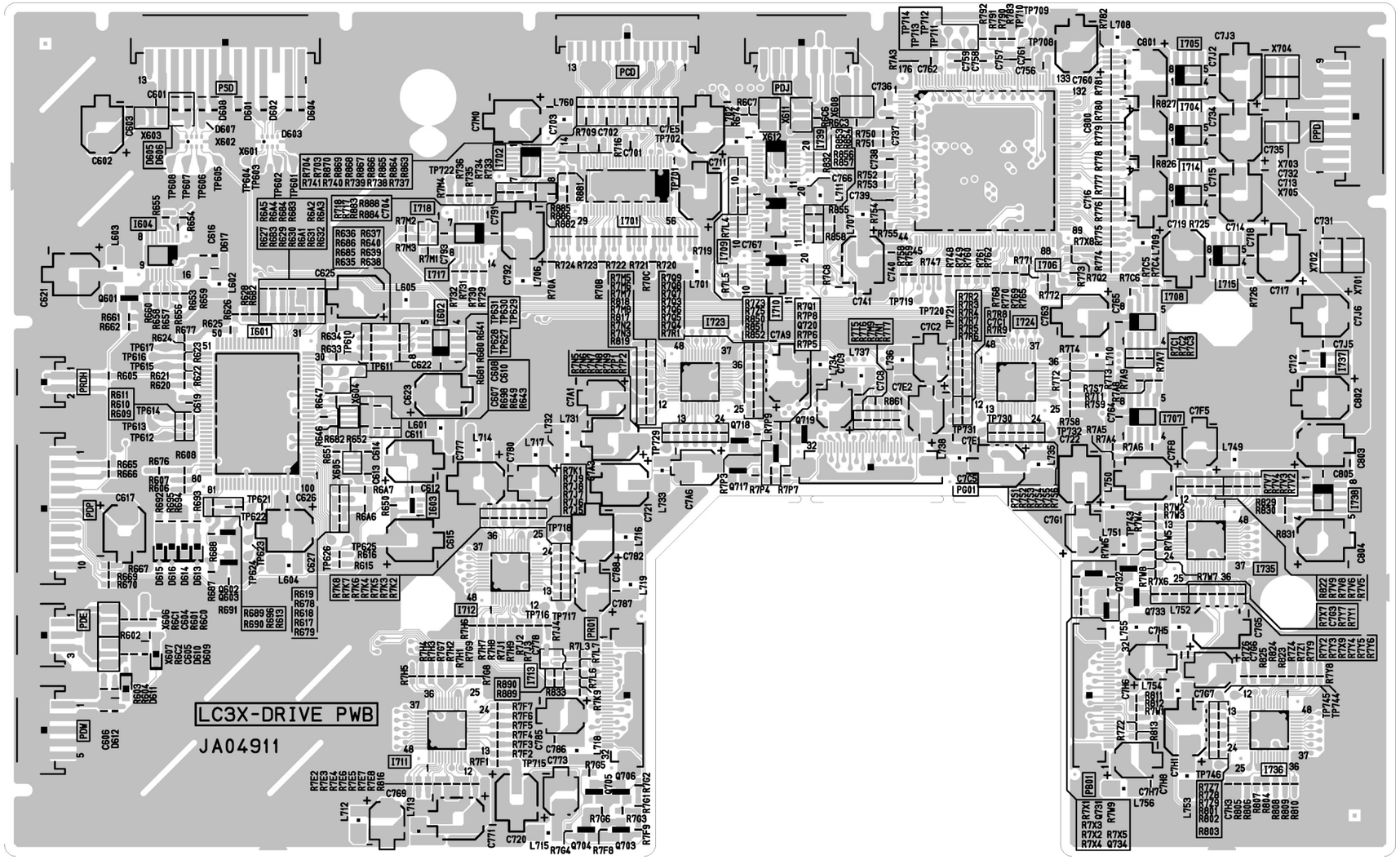

PRINTED CIRCUIT BOARD

Drive SS

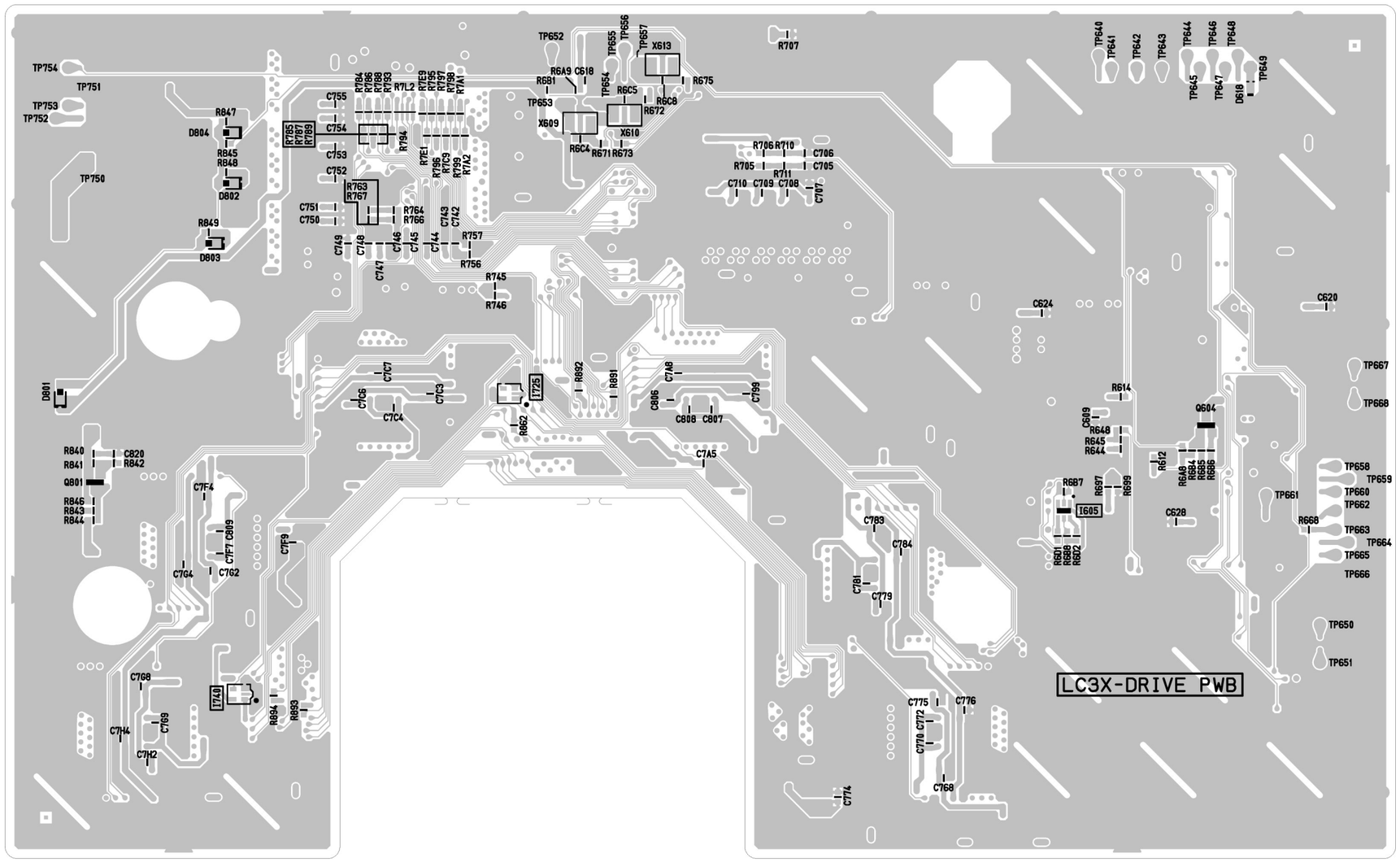

PRINTED CIRCUIT BOARD

DVI CS

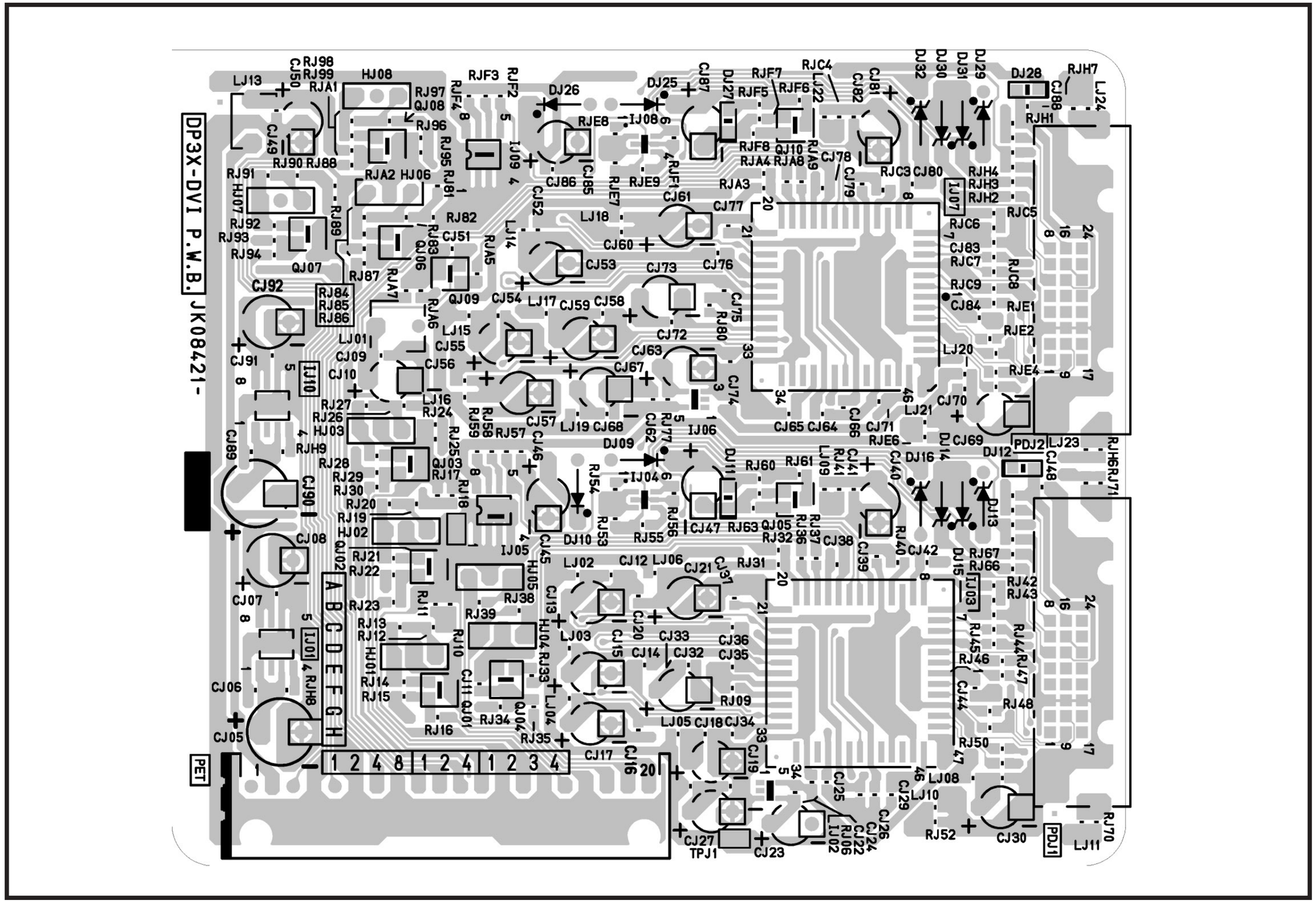

PRINTED CIRCUIT BOARD

DVI SS

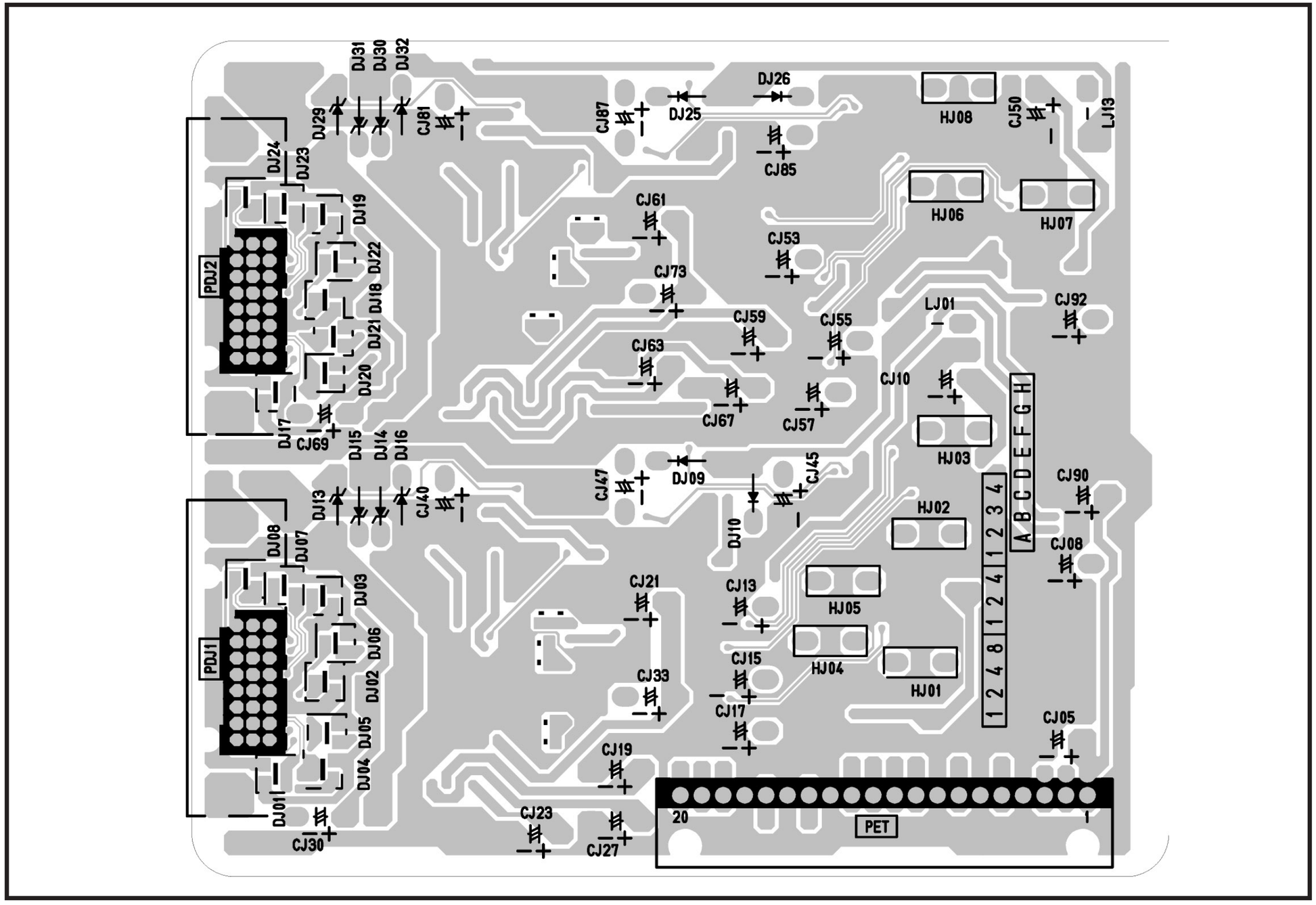

PRINTED CIRCUIT BOARD

Power CS

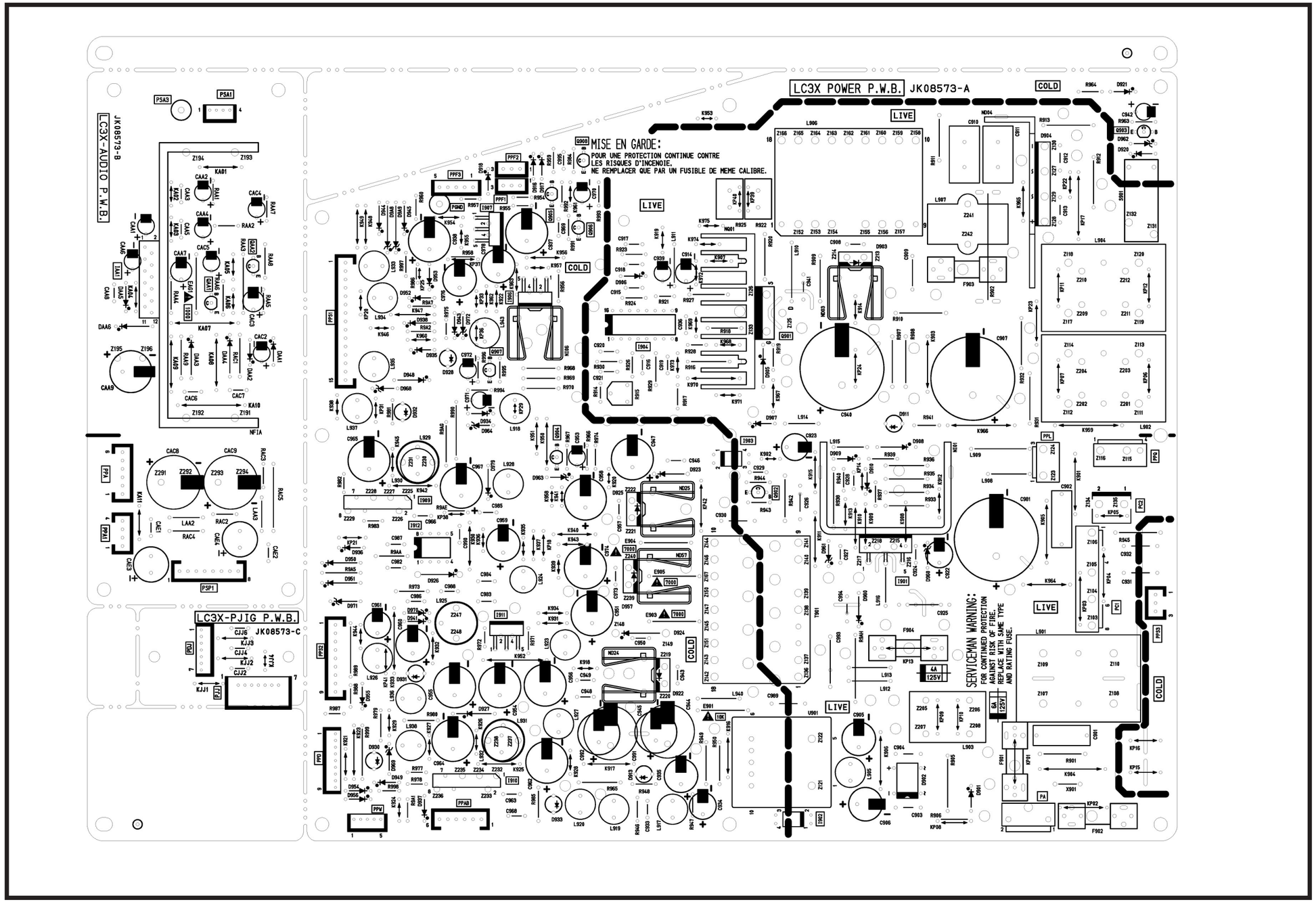

PRINTED CIRCUIT BOARD

Power SS

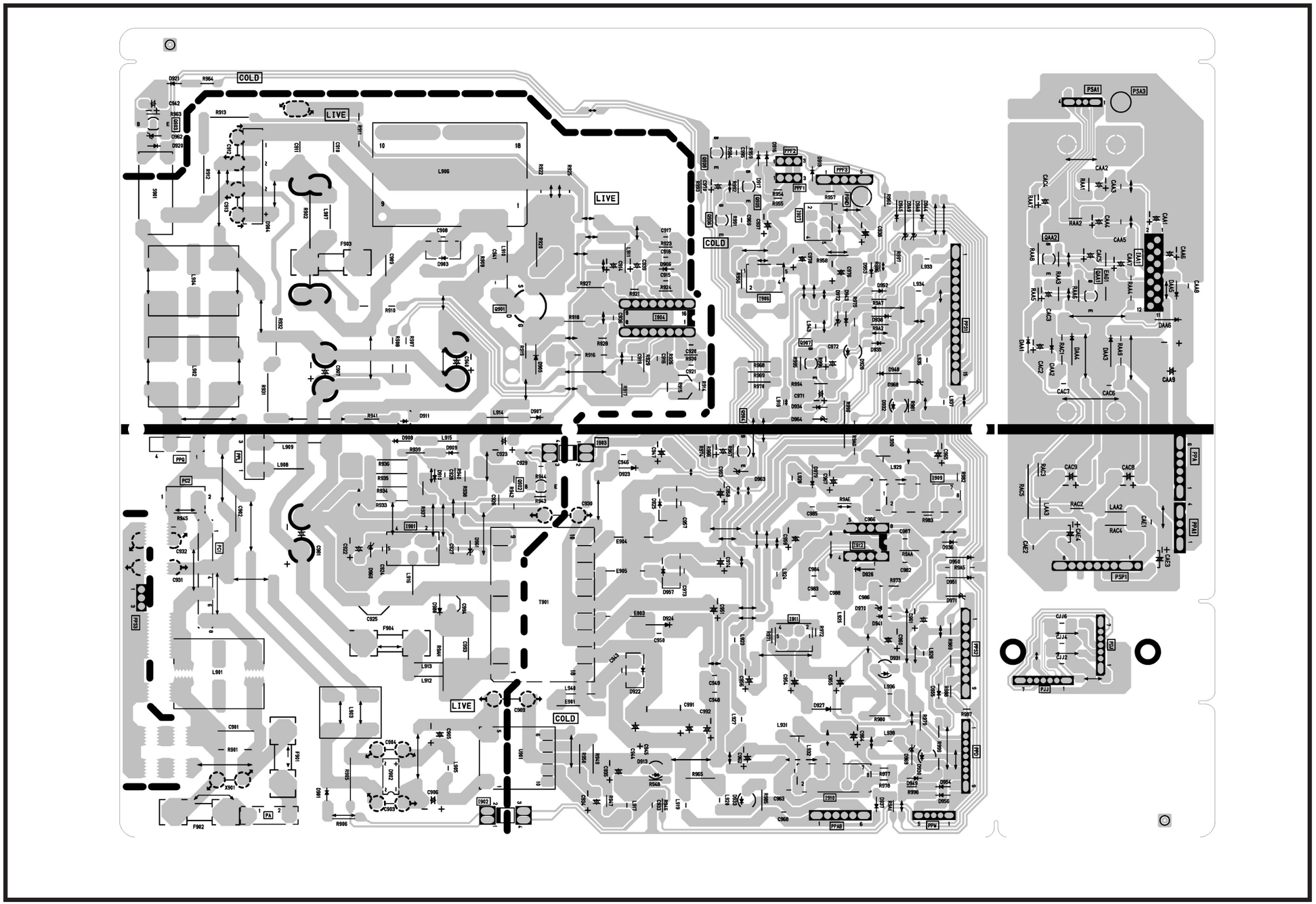

PRINTED CIRCUIT BOARD

Signal CS

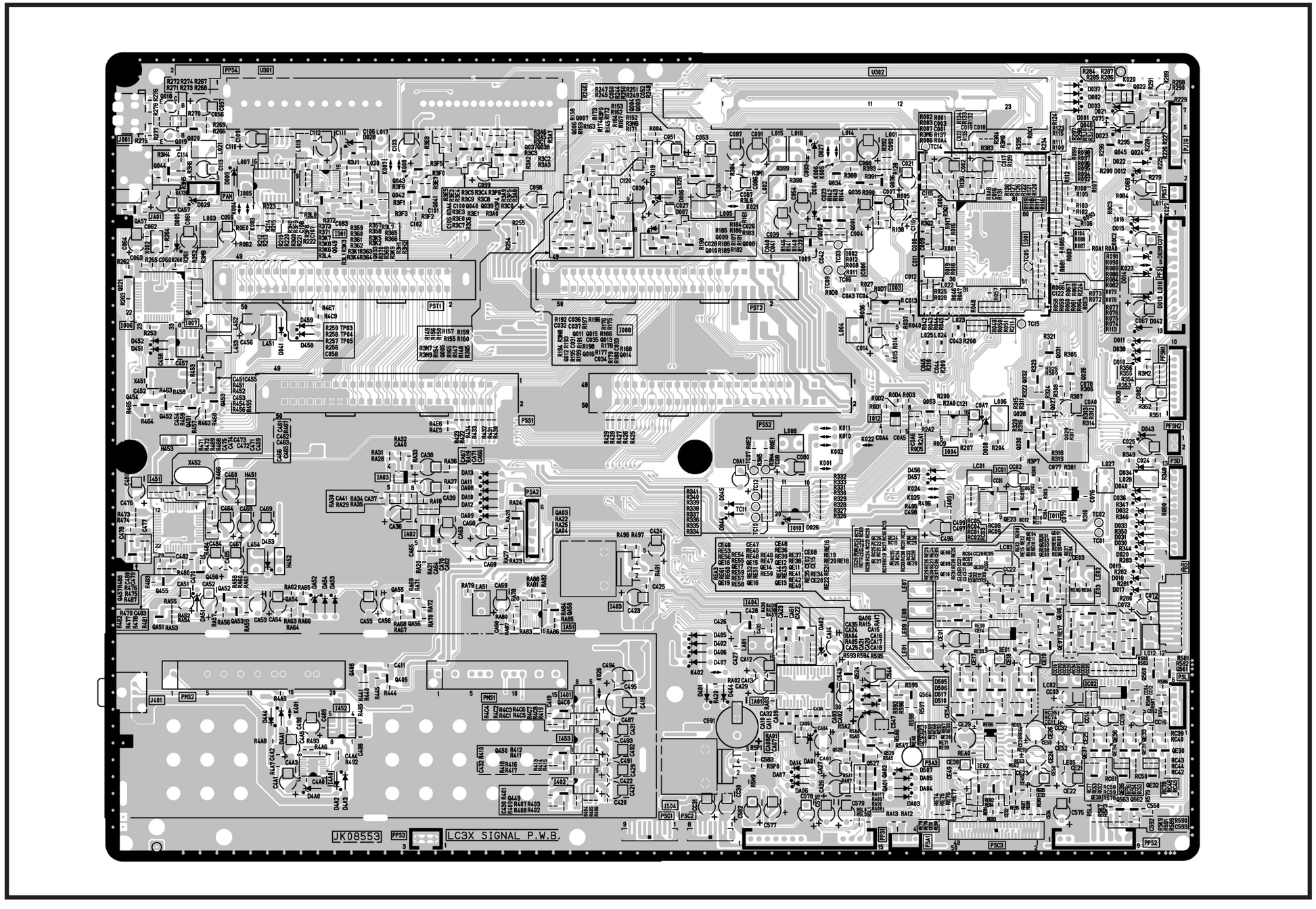

PRINTED CIRCUIT BOARD

Signal SS

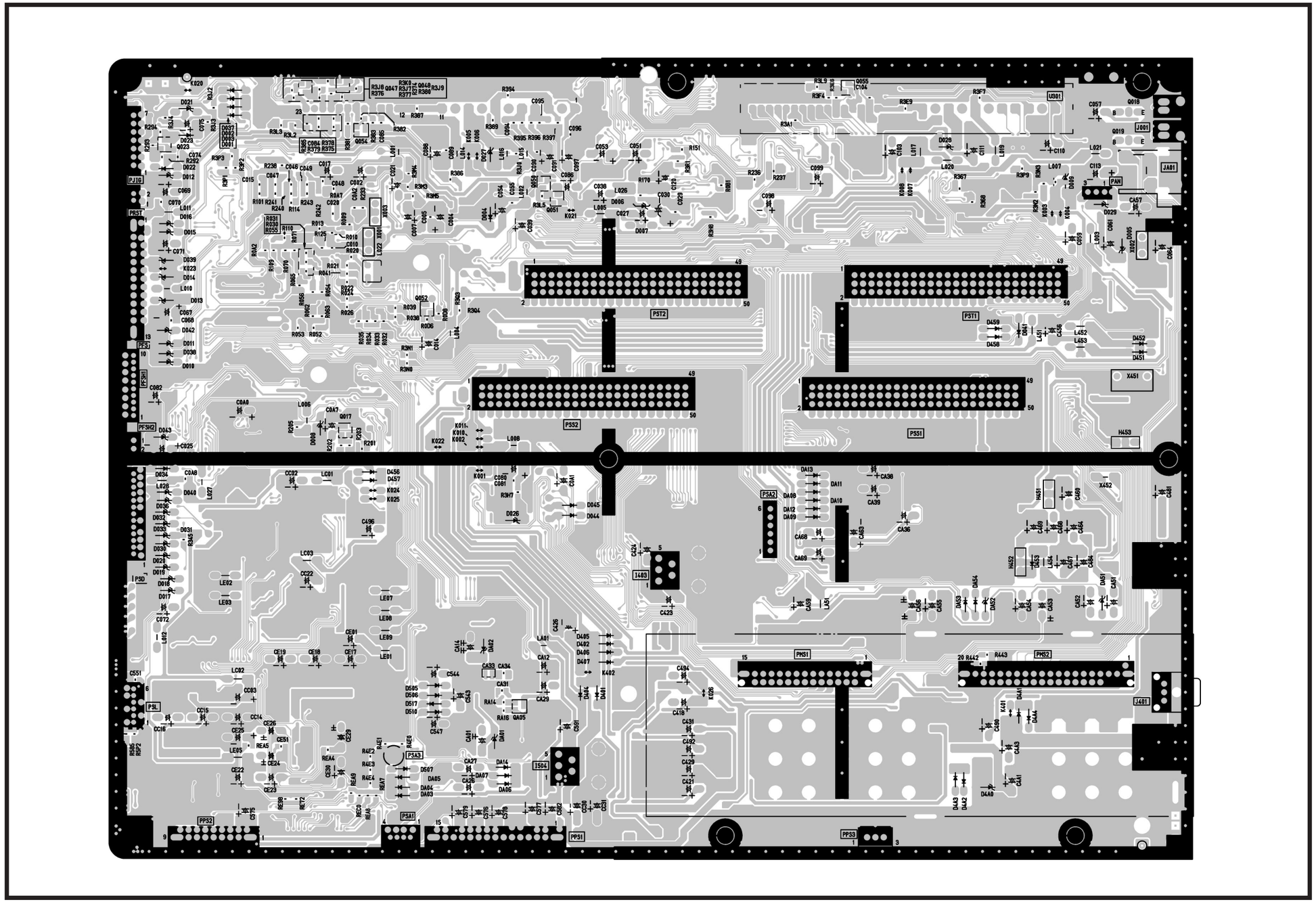

PRINTED CIRCUIT BOARD

Terminal CS

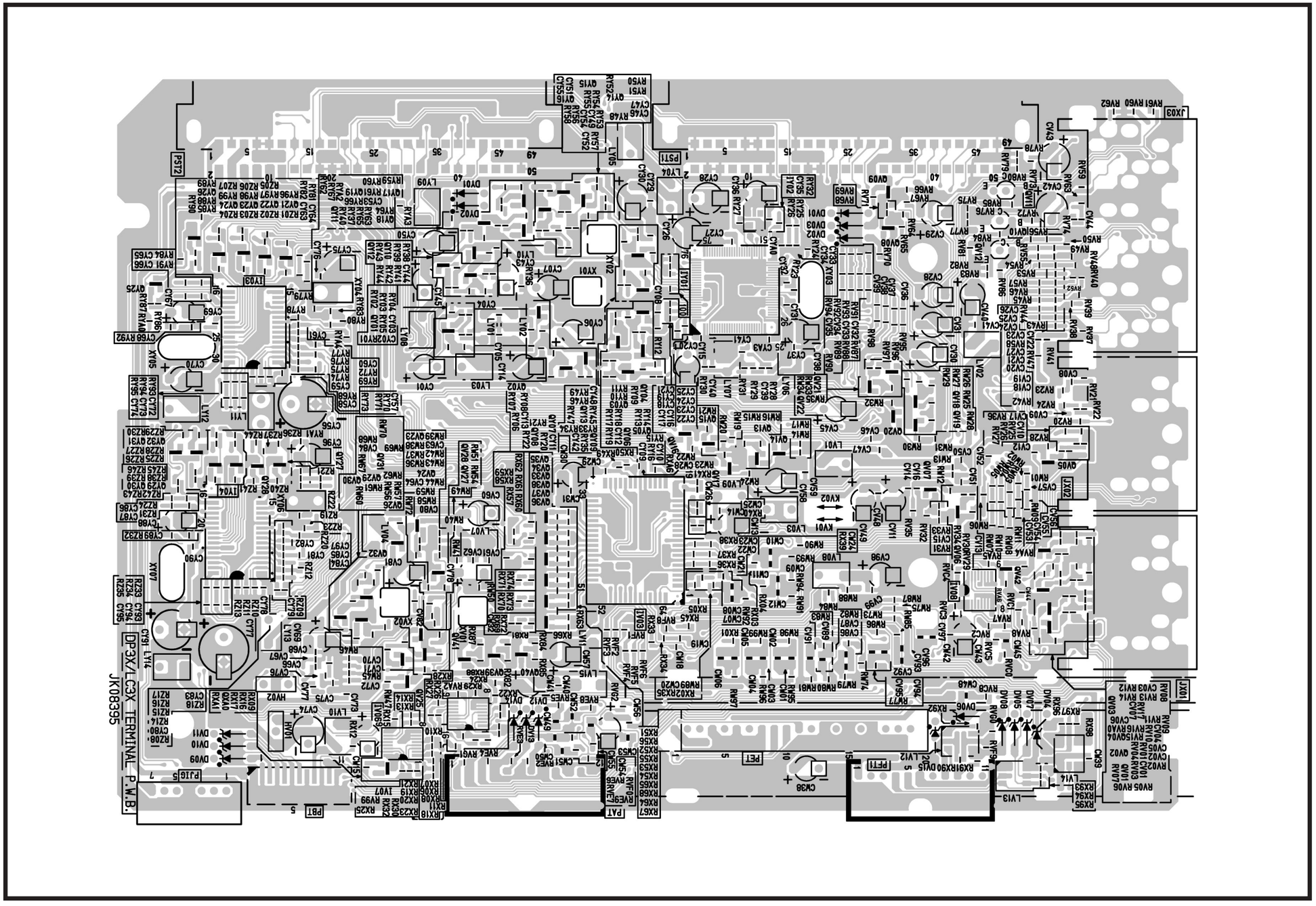

PRINTED CIRCUIT BOARD

Terminal SS

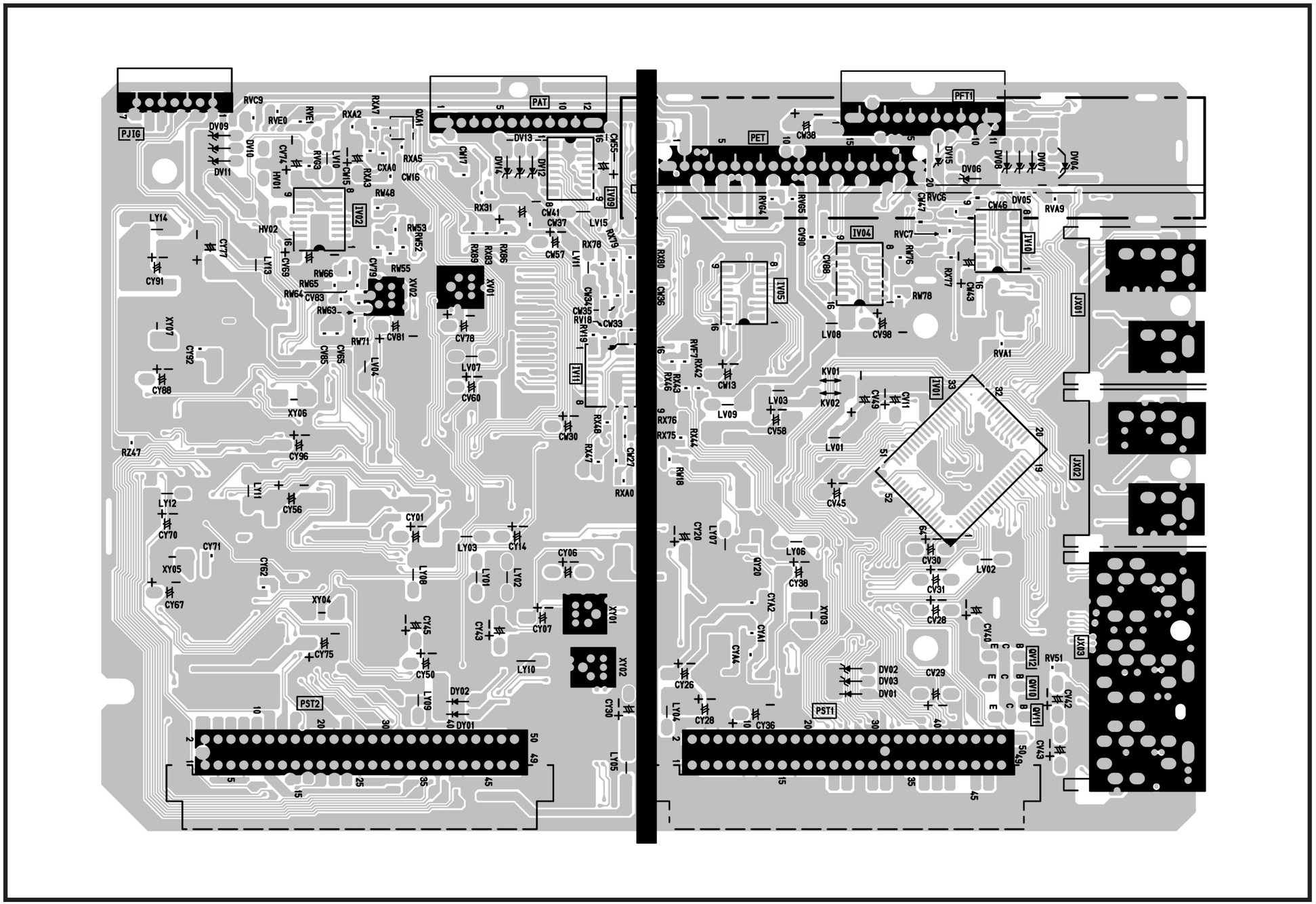

CONNCETION DIAGRAM

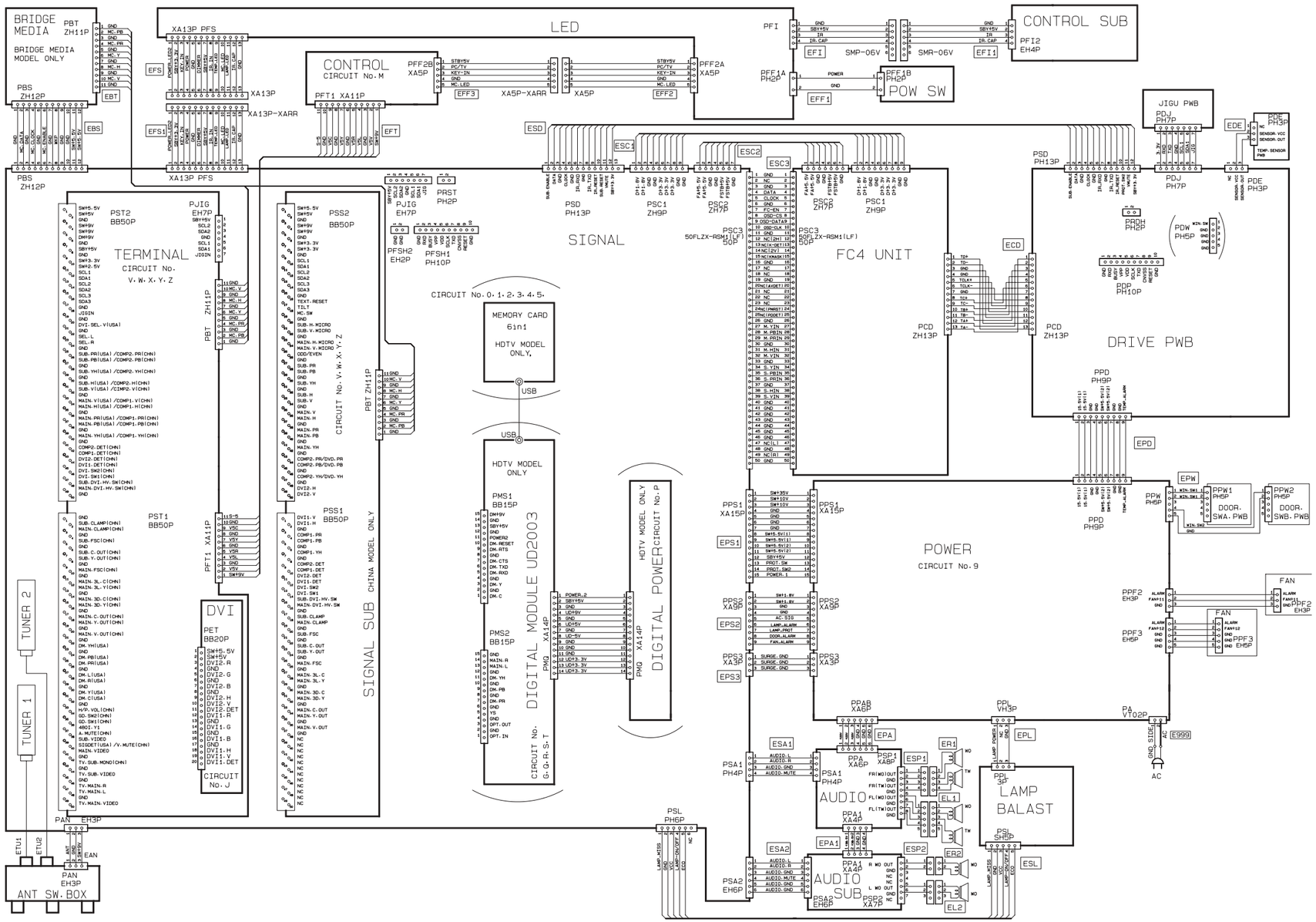

BLOCK DIAGRAM

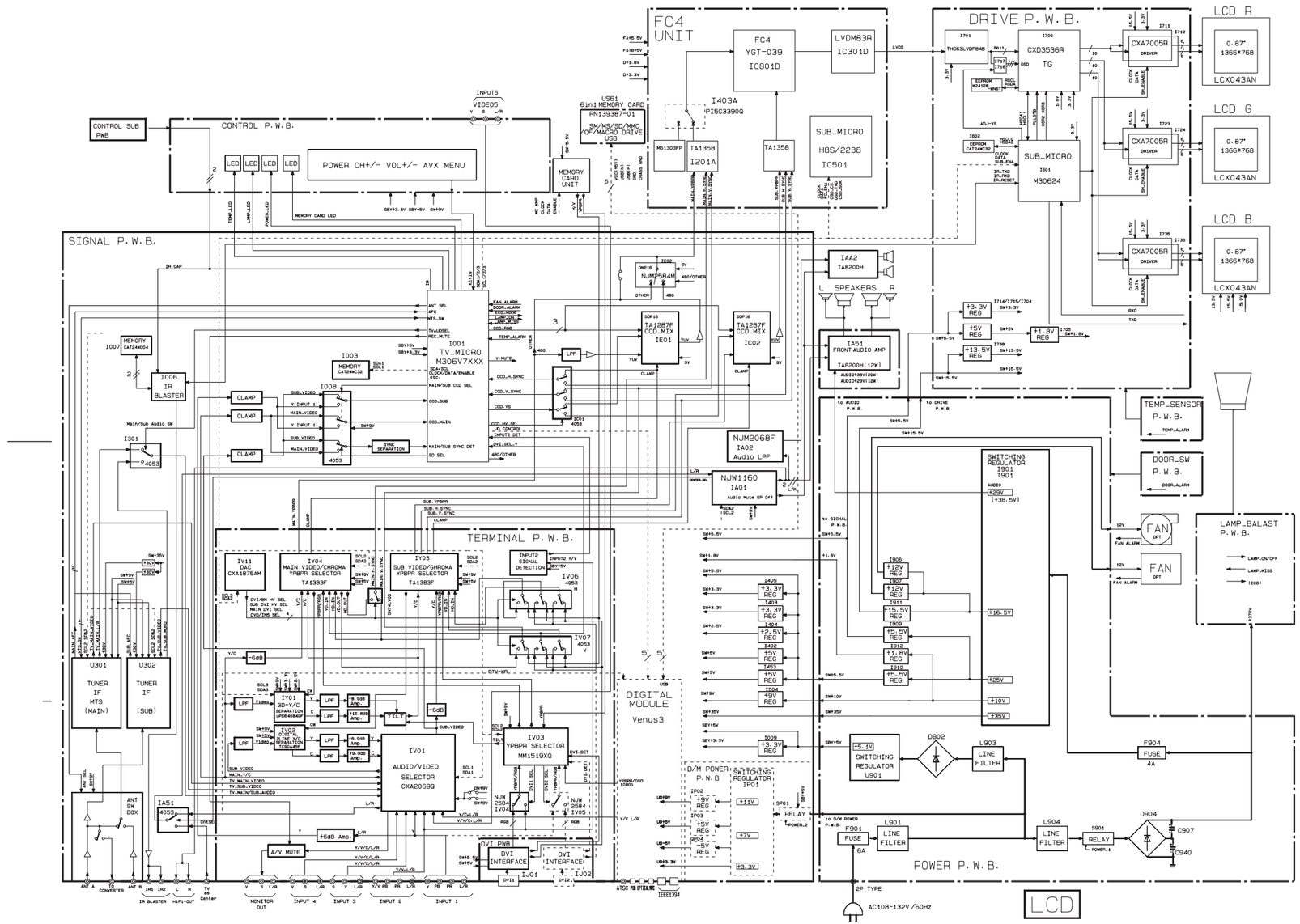

PRODUCT SAFETY NOTE: Components marked with a ⚠ and shaded have special characteristics important to safety. Before replacing any of these components, read carefully the PRODUCT SAFETY NOTICE of this Service Manual. Don't degrade the safety of the receiver through improper servicing.

BASIC CIRCUIT DIAGRAM

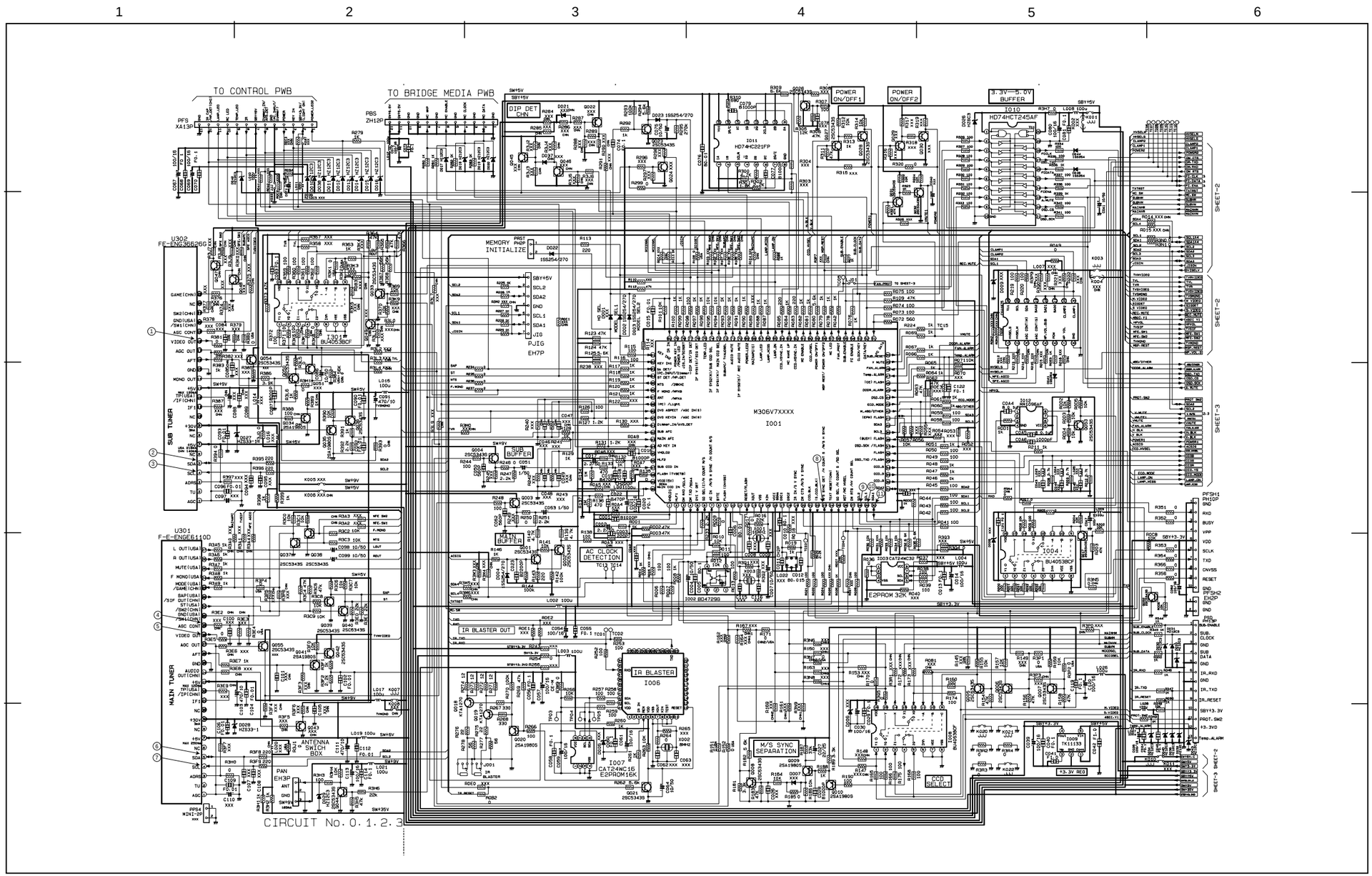

- All DC voltage to be measured with a tester (100kΩ/V). Voltage taken on a complex color bar signal including a standard color bar signal.
- Since this is a basic circuit diagram, the value of the parts is subject to be altered for improvement.

Signal 1 of 3

BACK TO ADJUSTMENTS

PRODUCT SAFETY NOTE: Components marked with a ⚠ and shaded have special characteristics important to safety. Before replacing any of these components, read carefully the PRODUCT SAFETY NOTICE of this Service Manual. Don't degrade the safety of the receiver through improper servicing.

BASIC CIRCUIT DIAGRAM

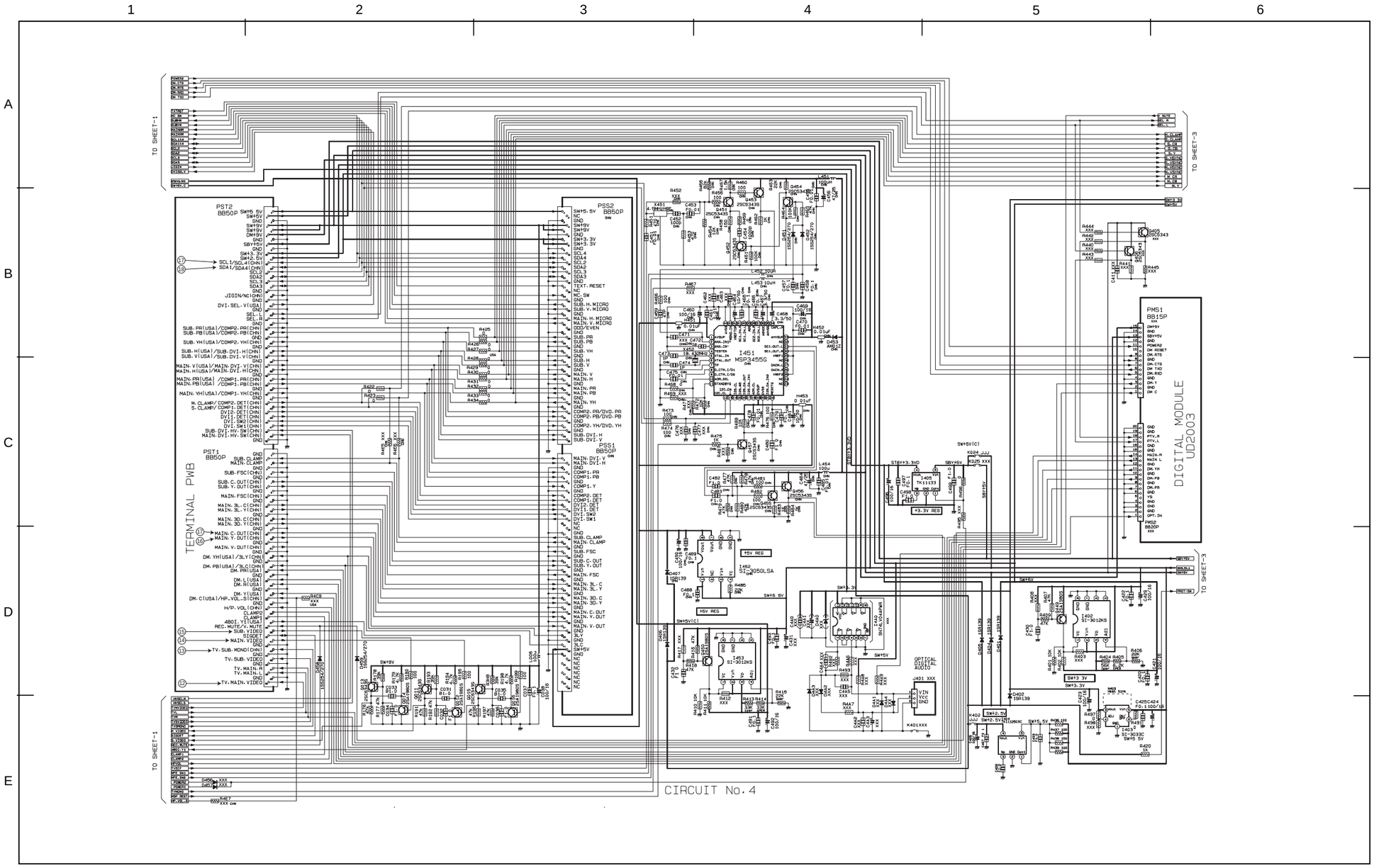

- All DC voltage to be measured with a tester (100kΩ/V). Voltage taken on a complex color bar signal including a standard color bar signal.
- Since this is a basic circuit diagram, the value of the parts is subject to be altered for improvement.

PRODUCT SAFETY NOTE: Components marked with a ⚠ and shaded have special characteristics important to safety. Before replacing any of these components, read carefully the PRODUCT SAFETY NOTICE of this Service Manual. Don't degrade the safety of the receiver through improper servicing.

BASIC CIRCUIT DIAGRAM

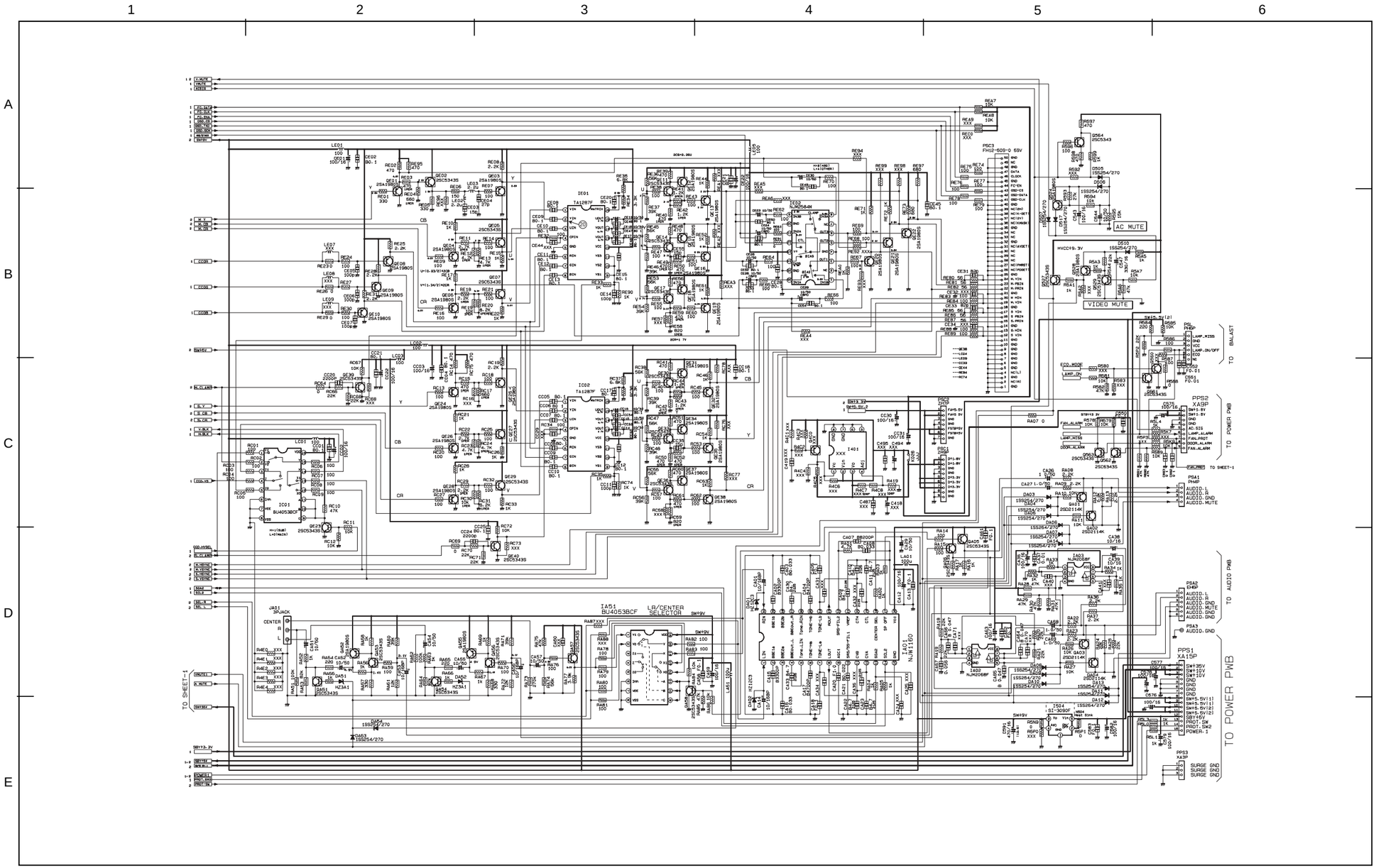

- All DC voltage to be measured with a tester (100kΩ/V). Voltage taken on a complex color bar signal including a standard color bar signal.
- Since this is a basic circuit diagram, the value of the parts is subject to be altered for improvement.

Signal 3 of 3

PRODUCT SAFETY NOTE: Components marked with a ⚠ and shaded have special characteristics important to safety. Before replacing any of these components, read carefully the PRODUCT SAFETY NOTICE of this Service Manual. Don't degrade the safety of the receiver through improper servicing.

BASIC CIRCUIT DIAGRAM

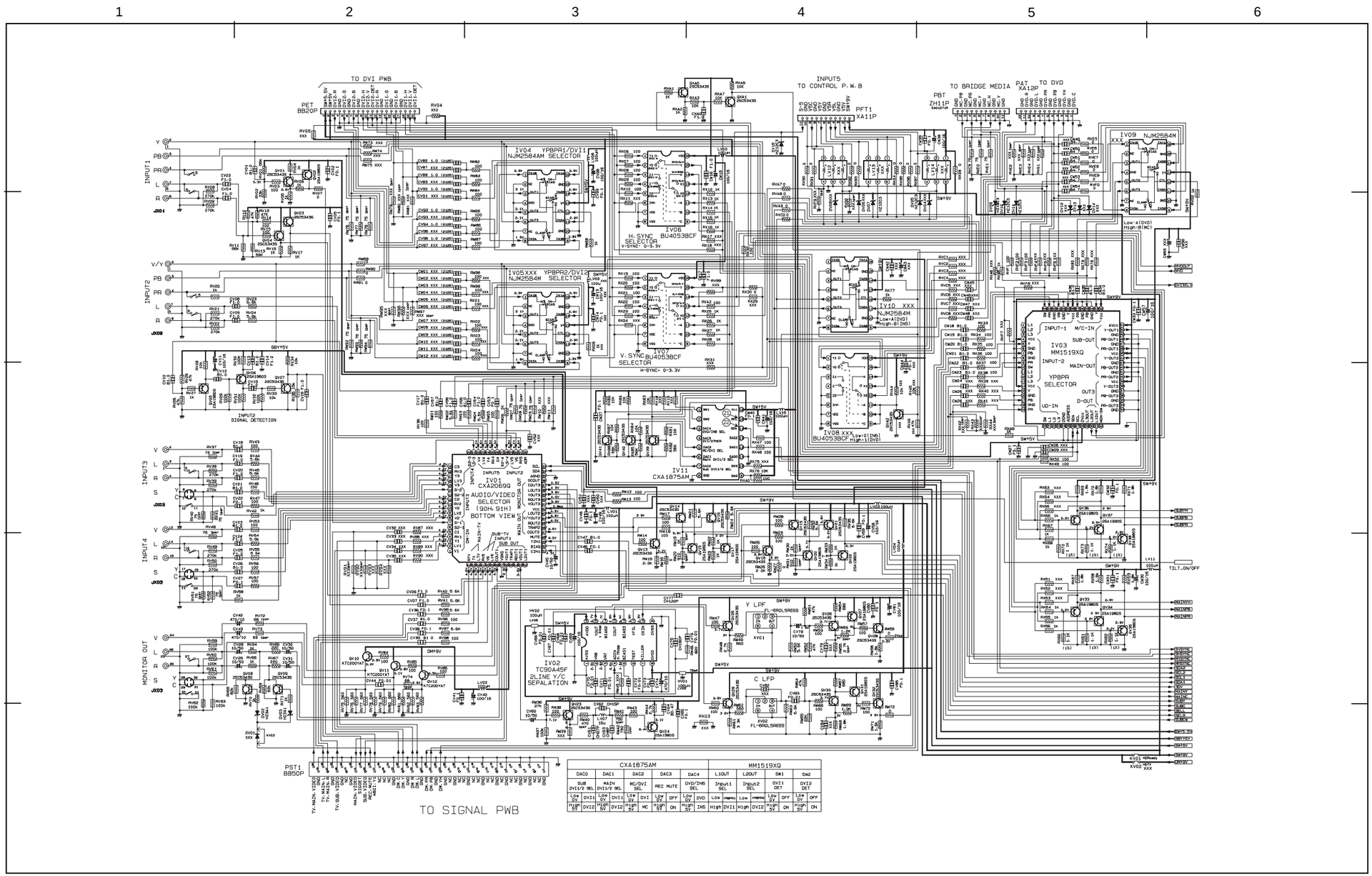

CXA1875AM								MM1519XQ							
DAC0		DAC1		DAC2		DAC3		DAC4		L1OUT	L2OUT	SW1		SW2	
SUB DVI1/2 SEL		MAIN DVI1/2 SEL		MC/DVI SEL		REC MUTE		DVD/INS SEL		Input1 SEL	Input2 SEL	DVI1 DET		DVI2 DET	
Low 0V	DVI1	Low 0V	DVI1	Low 0V	DVI	Low 0V	OFF	Low 0V	DVD	Low	YPBPR2	Low 0V	OFF	Low 0V	OFF
High 5V	DVI2	High 5V	DVI2	High 5V	MC	High 5V	ON	High 5V	INS	High	DVI1	High	DVI2	High 5V	ON

- All DC voltage to be measured with a tester (100kΩ/V). Voltage taken on a complex color bar signal including a standard color bar signal.
- Since this is a basic circuit diagram, the value of the parts is subject to be altered for improvement.

PRODUCT SAFETY NOTE: Components marked with a ⚠ and shaded have special characteristics important to safety. Before replacing any of these components, read carefully the PRODUCT SAFETY NOTICE of this Service Manual. Don't degrade the safety of the receiver through improper servicing.

BASIC CIRCUIT DIAGRAM

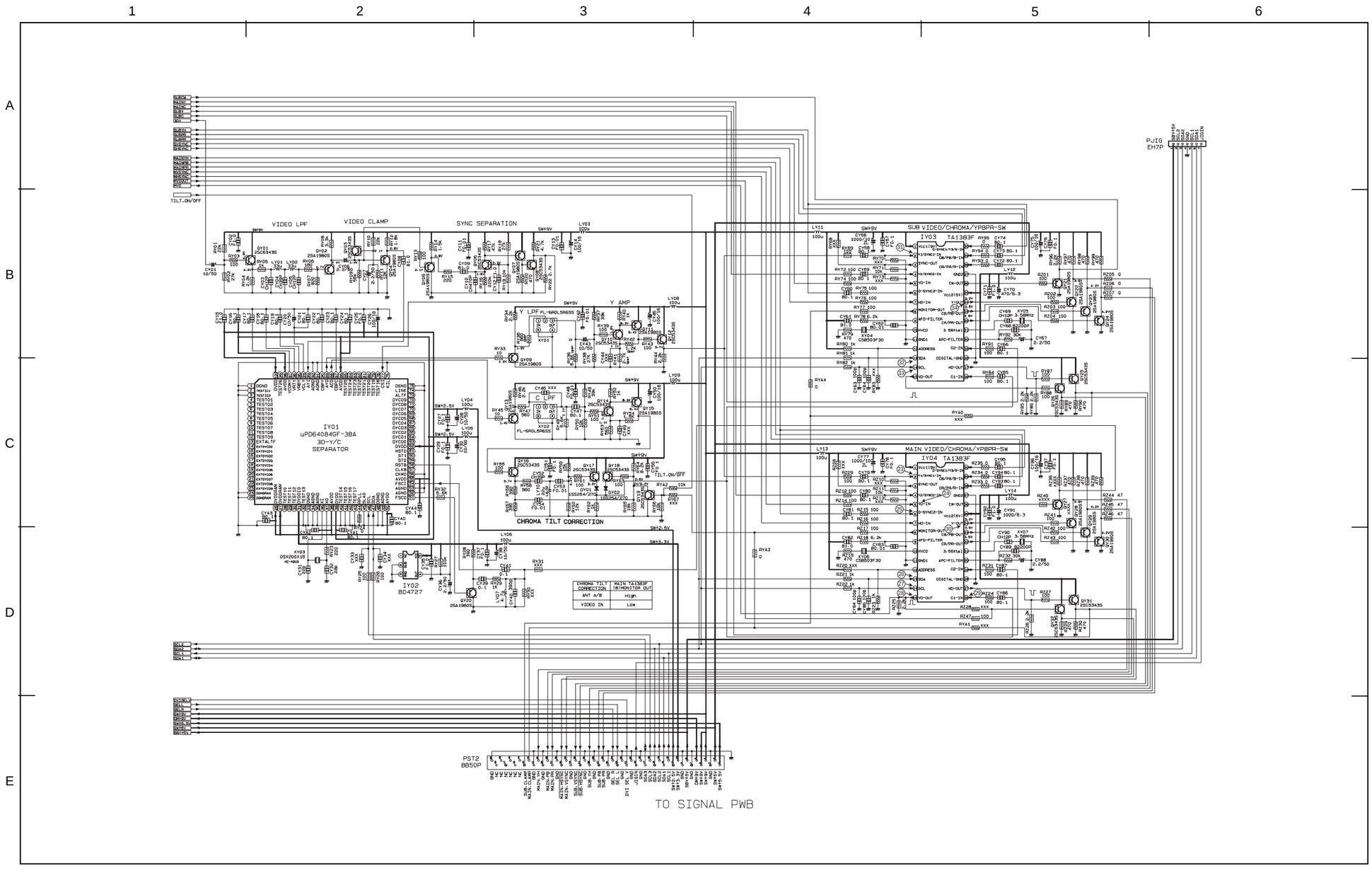

- All DC voltage to be measured with a tester (100kΩ/V). Voltage taken on a complex color bar signal including a standard color bar signal.
- Since this is a basic circuit diagram, the value of the parts is subject to be altered for improvement.

PRODUCT SAFETY NOTE: Components marked with a ⚠ and shaded have special characteristics important to safety. Before replacing any of these components, read carefully the PRODUCT SAFETY NOTICE of this Service Manual. Don't degrade the safety of the receiver through improper servicing.

BASIC CIRCUIT DIAGRAM

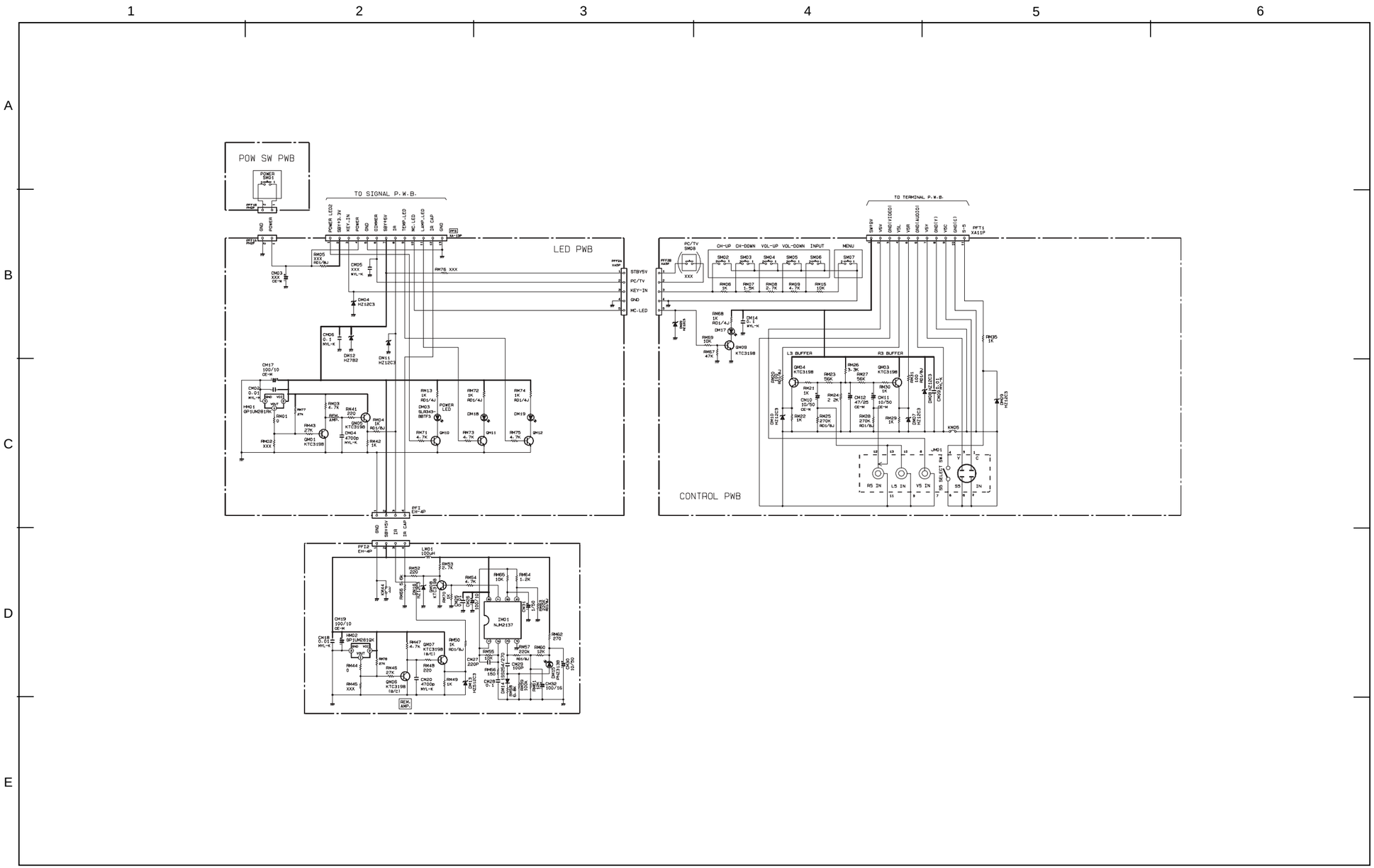

- All DC voltage to be measured with a tester (100kΩ/V). Voltage taken on a complex color bar signal including a standard color bar signal.
- Since this is a basic circuit diagram, the value of the parts is subject to be altered for improvement.

PRODUCT SAFETY NOTE: Components marked with a ⚠ and shaded have special characteristics important to safety. Before replacing any of these components, read carefully the PRODUCT SAFETY NOTICE of this Service Manual. Don't degrade the safety of the receiver through improper servicing.

BASIC CIRCUIT DIAGRAM

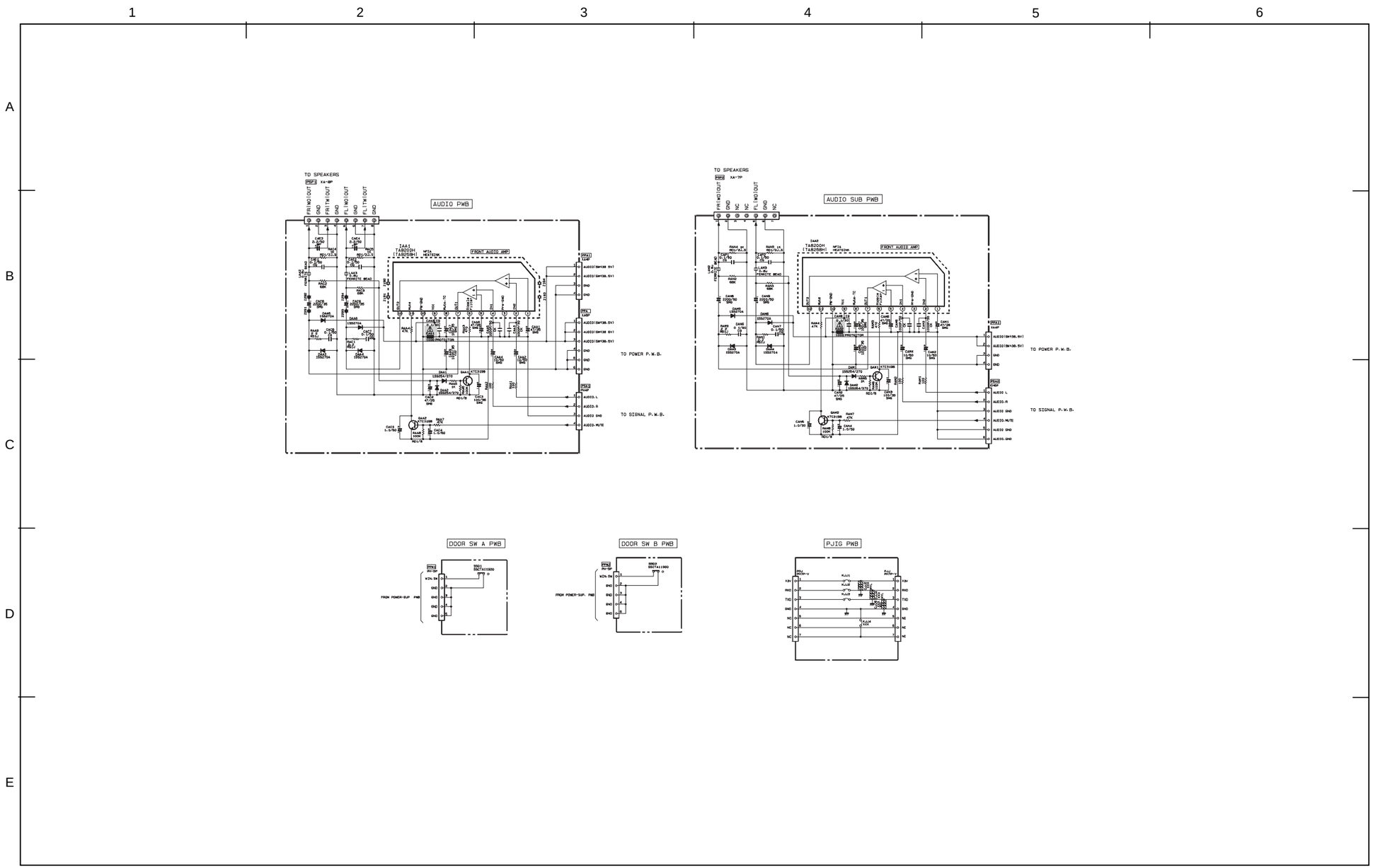

- All DC voltage to be measured with a tester (100kΩ/V). Voltage taken on a complex color bar signal including a standard color bar signal.
- Since this is a basic circuit diagram, the value of the parts is subject to be altered for improvement.

PRODUCT SAFETY NOTE: Components marked with a ⚠ and shaded have special characteristics important to safety. Before replacing any of these components, read carefully the PRODUCT SAFETY NOTICE of this Service Manual. Don't degrade the safety of the receiver through improper servicing.

BASIC CIRCUIT DIAGRAM

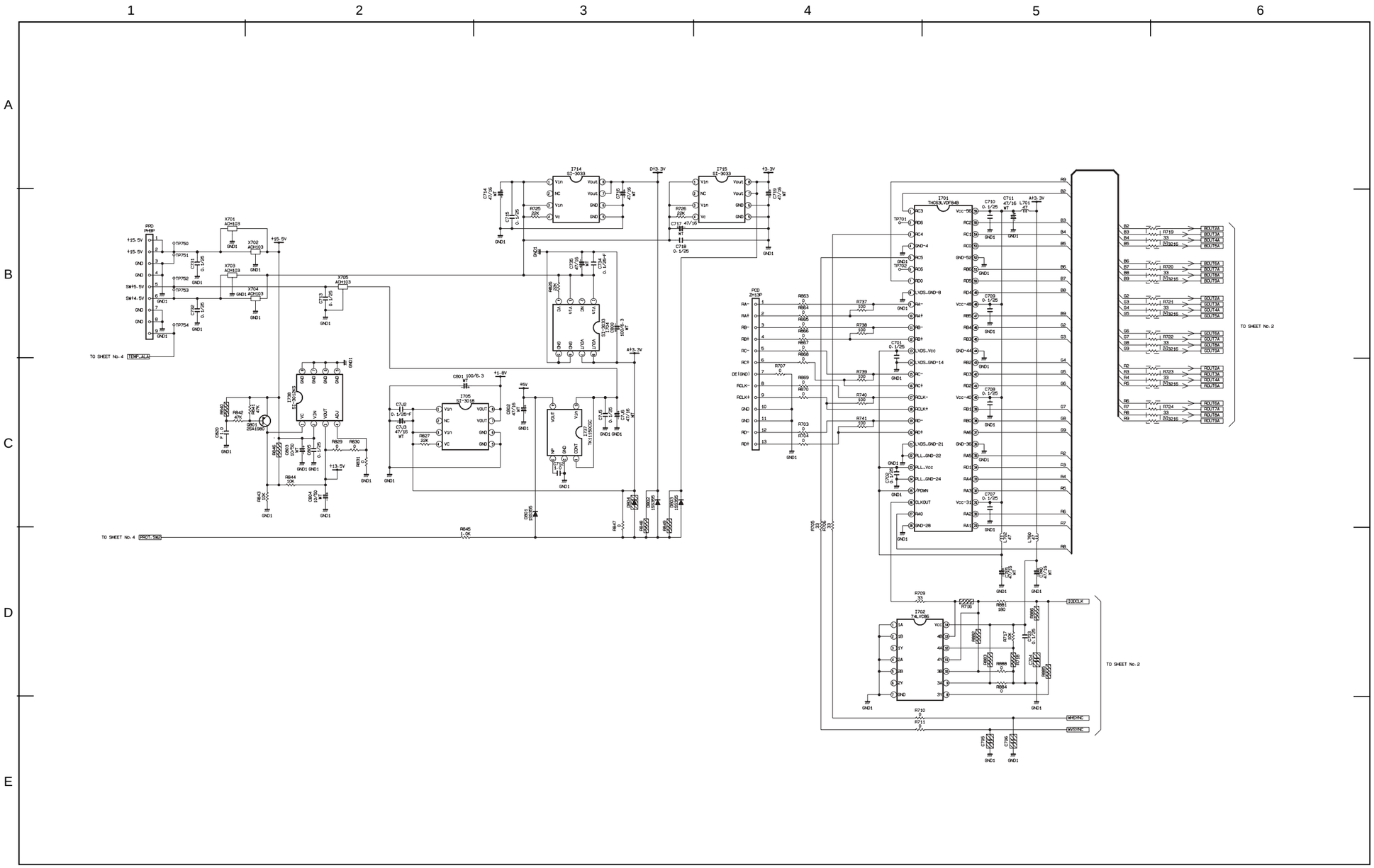

- All DC voltage to be measured with a tester (100kΩ/V). Voltage taken on a complex color bar signal including a standard color bar signal.
- Since this is a basic circuit diagram, the value of the parts is subject to be altered for improvement.

PRODUCT SAFETY NOTE: Components marked with a ⚠ and shaded have special characteristics important to safety. Before replacing any of these components, read carefully the PRODUCT SAFETY NOTICE of this Service Manual. Don't degrade the safety of the receiver through improper servicing.

BASIC CIRCUIT DIAGRAM

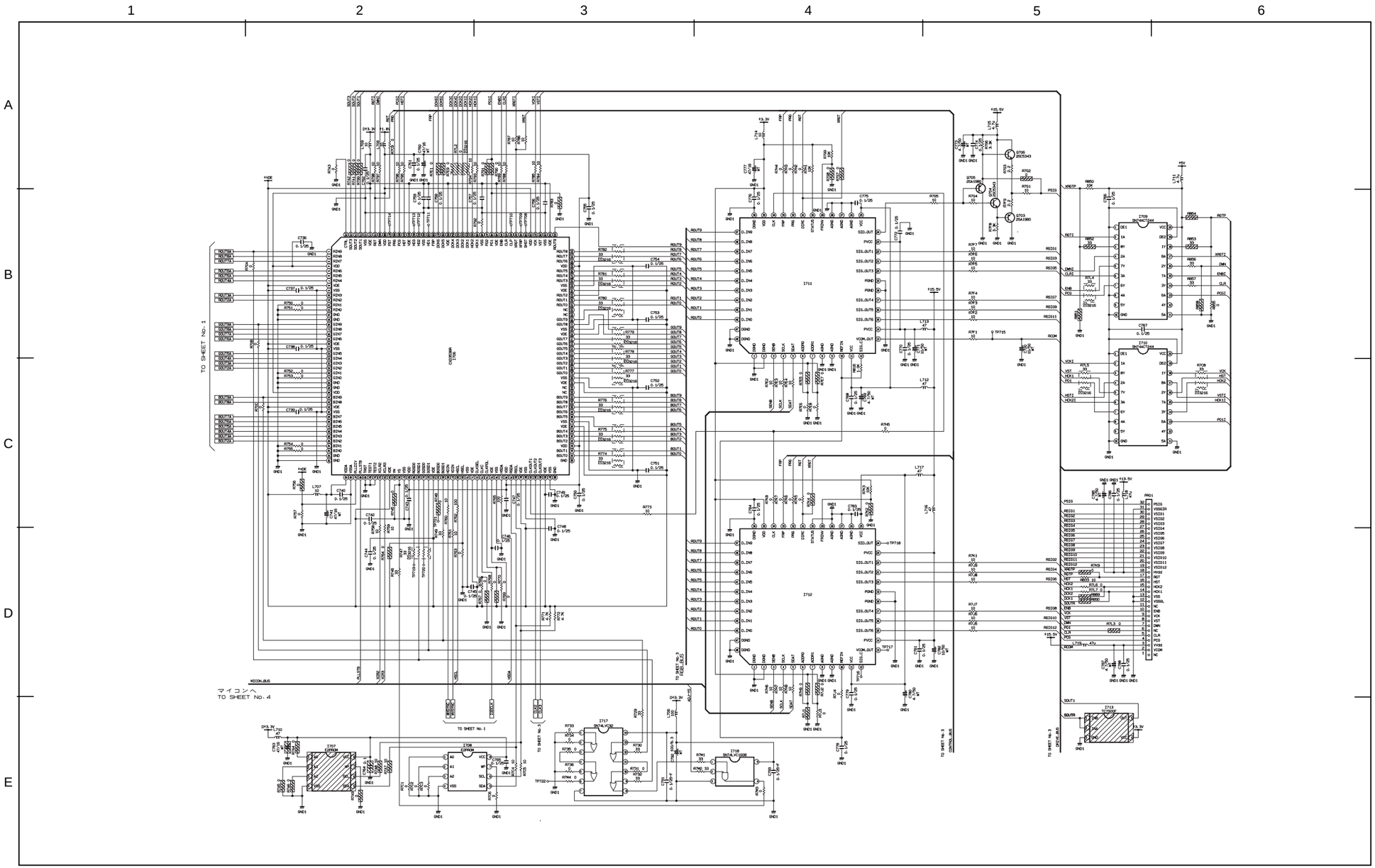

- All DC voltage to be measured with a tester (100kΩ/V). Voltage taken on a complex color bar signal including a standard color bar signal.
- Since this is a basic circuit diagram, the value of the parts is subject to be altered for improvement.

Drive 2 of 4

PRODUCT SAFETY NOTE: Components marked with a ⚠ and shaded have special characteristics important to safety. Before replacing any of these components, read carefully the PRODUCT SAFETY NOTICE of this Service Manual. Don't degrade the safety of the receiver through improper servicing.

BASIC CIRCUIT DIAGRAM

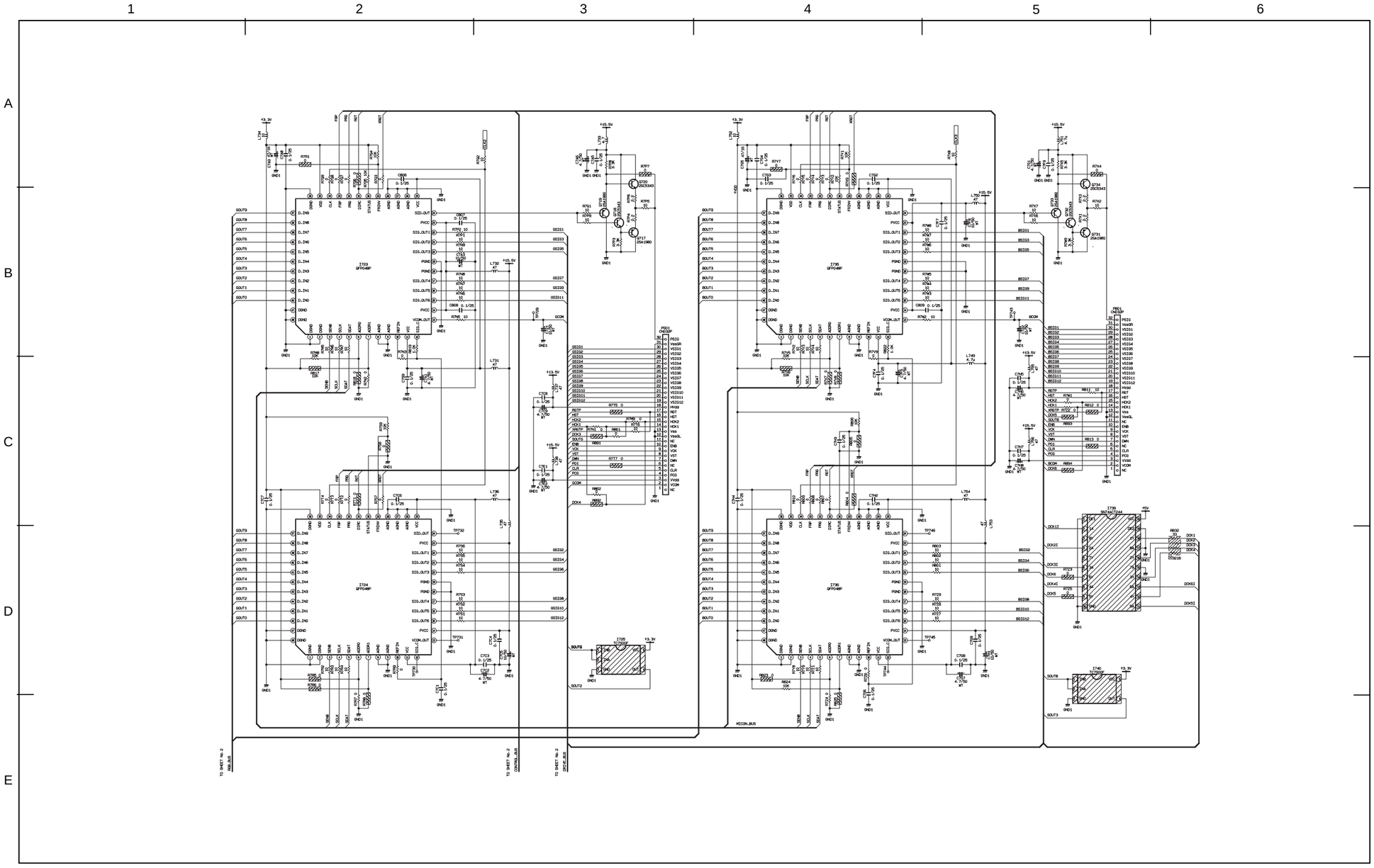

- All DC voltage to be measured with a tester (100kΩ/V). Voltage taken on a complex color bar signal including a standard color bar signal.
- Since this is a basic circuit diagram, the value of the parts is subject to be altered for improvement.

Drive 3 of 4

PRODUCT SAFETY NOTE: Components marked with a ⚠ and shaded have special characteristics important to safety. Before replacing any of these components, read carefully the PRODUCT SAFETY NOTICE of this Service Manual. Don't degrade the safety of the receiver through improper servicing.

BASIC CIRCUIT DIAGRAM

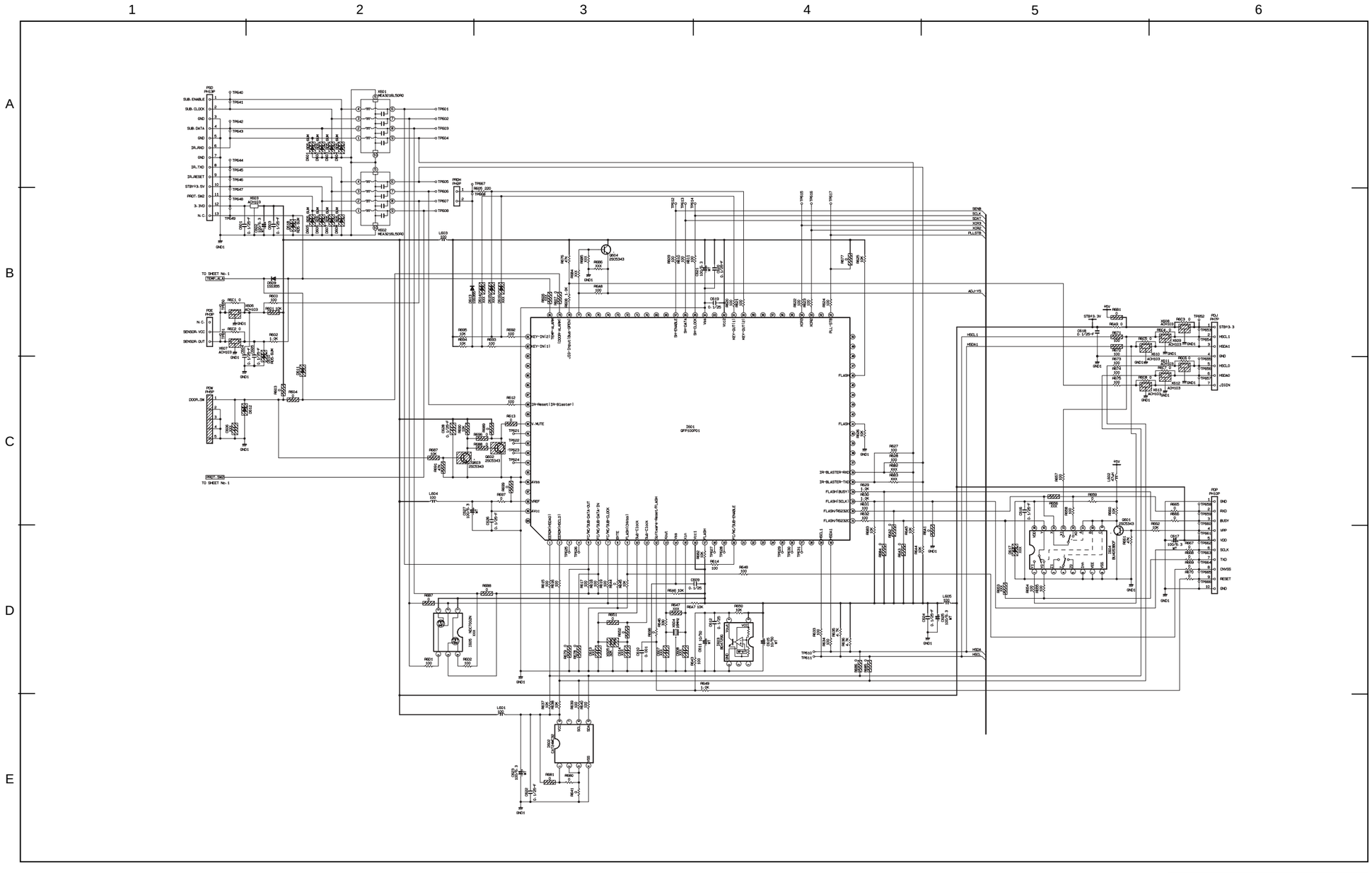

- All DC voltage to be measured with a tester (100kΩ/V). Voltage taken on a complex color bar signal including a standard color bar signal.
- Since this is a basic circuit diagram, the value of the parts is subject to be altered for improvement.

PRODUCT SAFETY NOTE: Components marked with a ⚠ and shaded have special characteristics important to safety. Before replacing any of these components, read carefully the PRODUCT SAFETY NOTICE of this Service Manual. Don't degrade the safety of the receiver through improper servicing.

BASIC CIRCUIT DIAGRAM

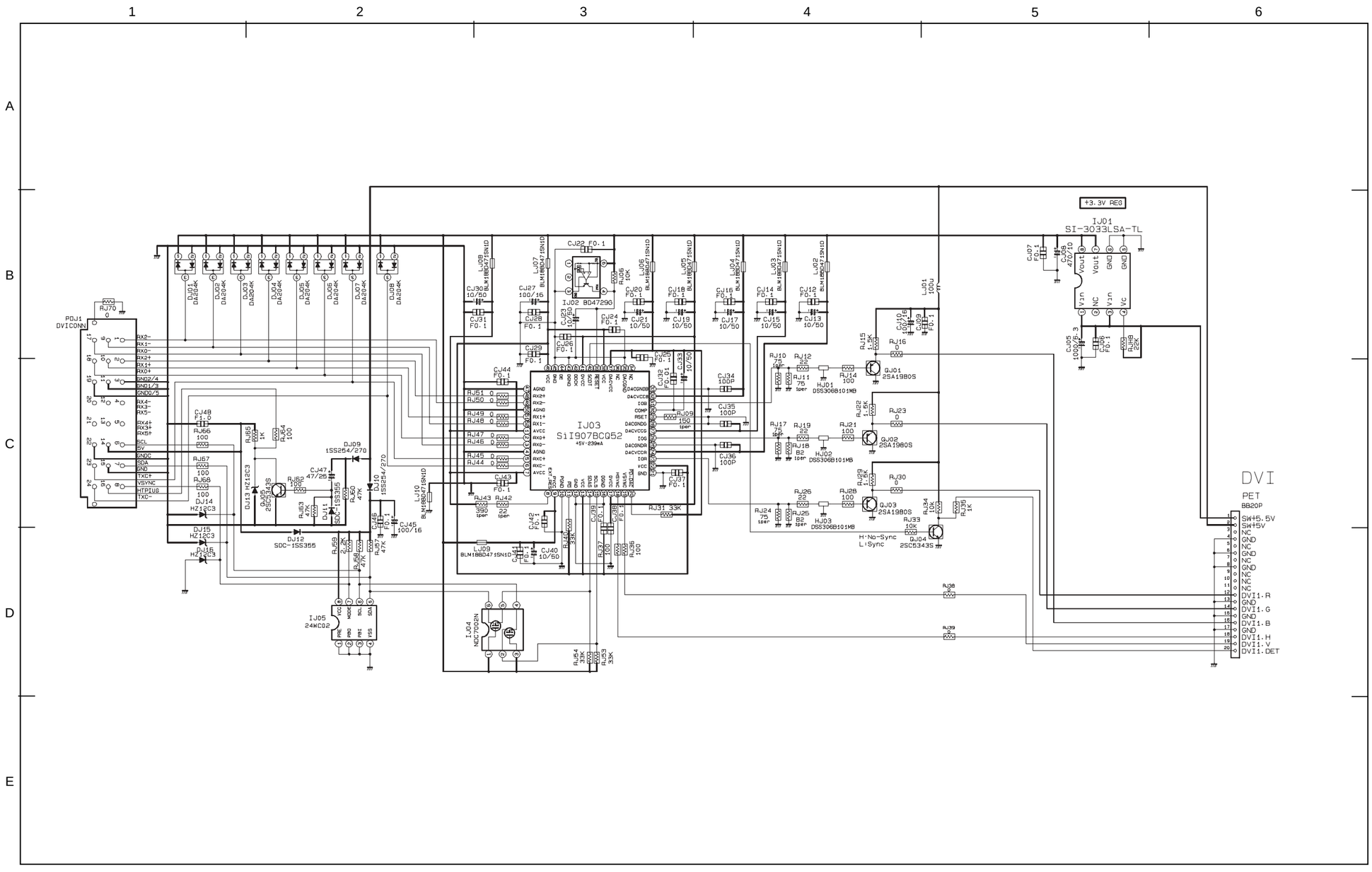

- All DC voltage to be measured with a tester (100kΩ/V). Voltage taken on a complex color bar signal including a standard color bar signal.
- Since this is a basic circuit diagram, the value of the parts is subject to be altered for improvement.

DVI

PRODUCT SAFETY NOTE: Components marked with a ⚠ and shaded have special characteristics important to safety. Before replacing any of these components, read carefully the PRODUCT SAFETY NOTICE of this Service Manual. Don't degrade the safety of the receiver through improper servicing.

BASIC CIRCUIT DIAGRAM

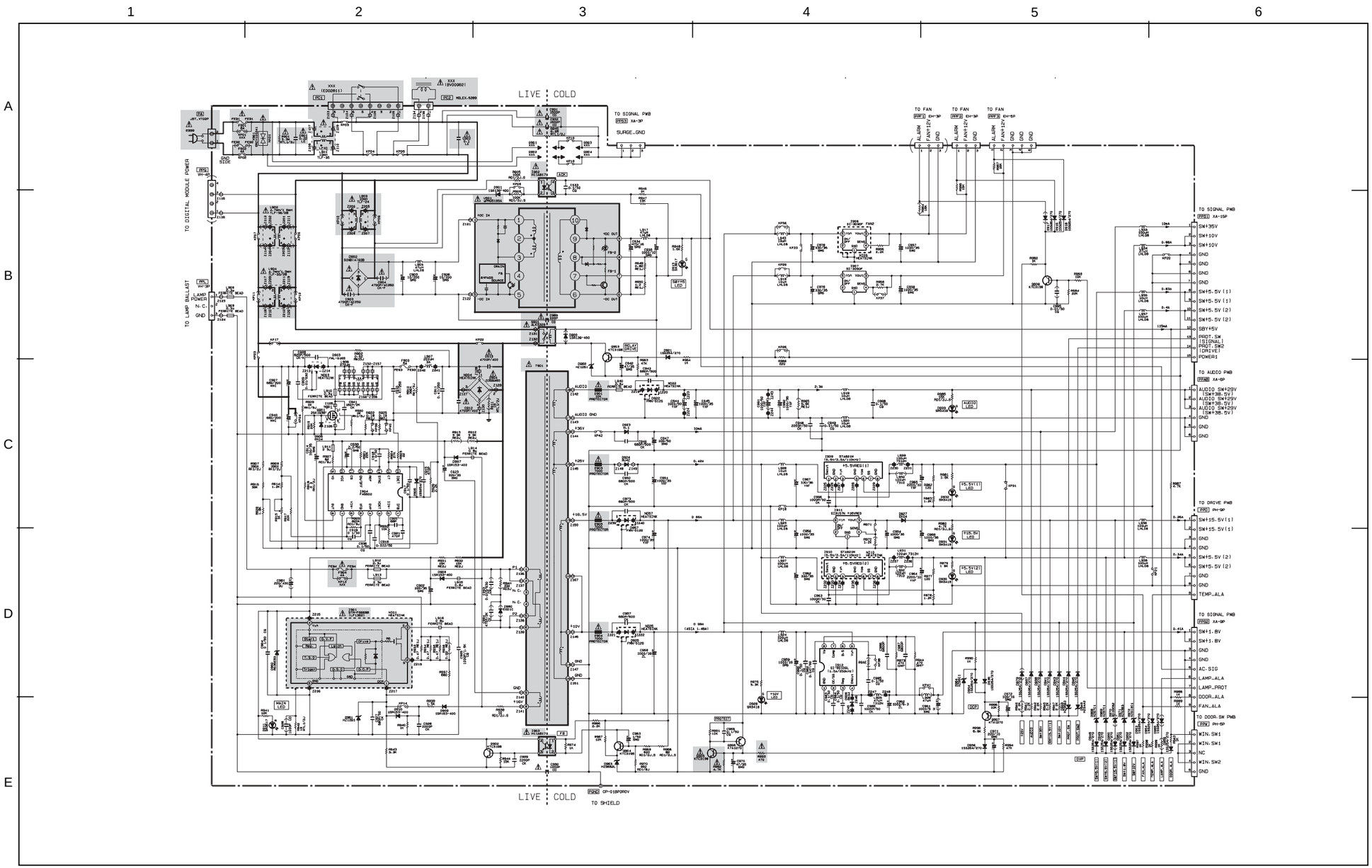

- All DC voltage to be measured with a tester (100kΩ/V). Voltage taken on a complex color bar signal including a standard color bar signal.
- Since this is a basic circuit diagram, the value of the parts is subject to be altered for improvement.

Power Supply

FINAL WIRING

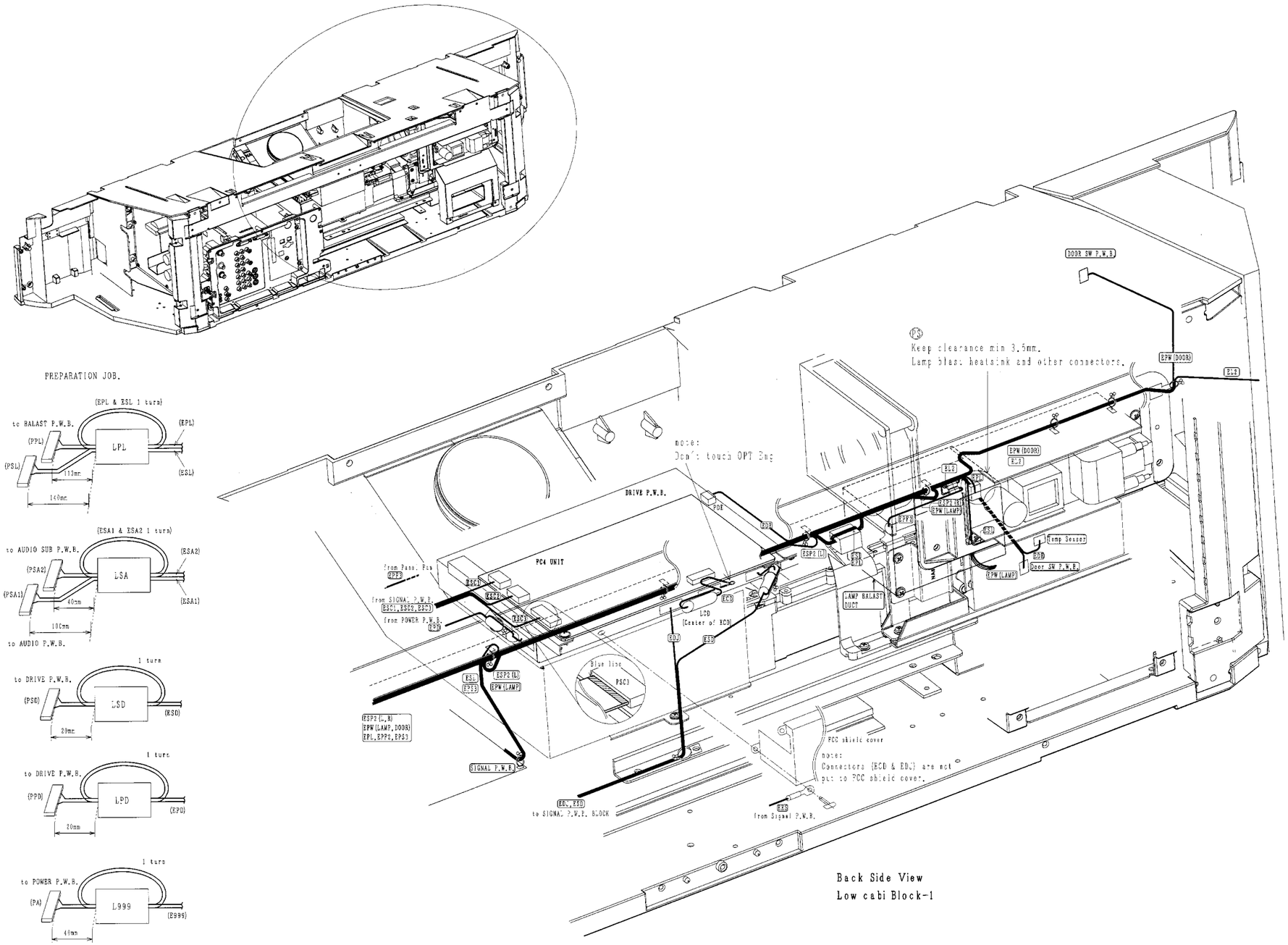

BACK TO ADJUSTMENTS

FINAL WIRING

2 of 4

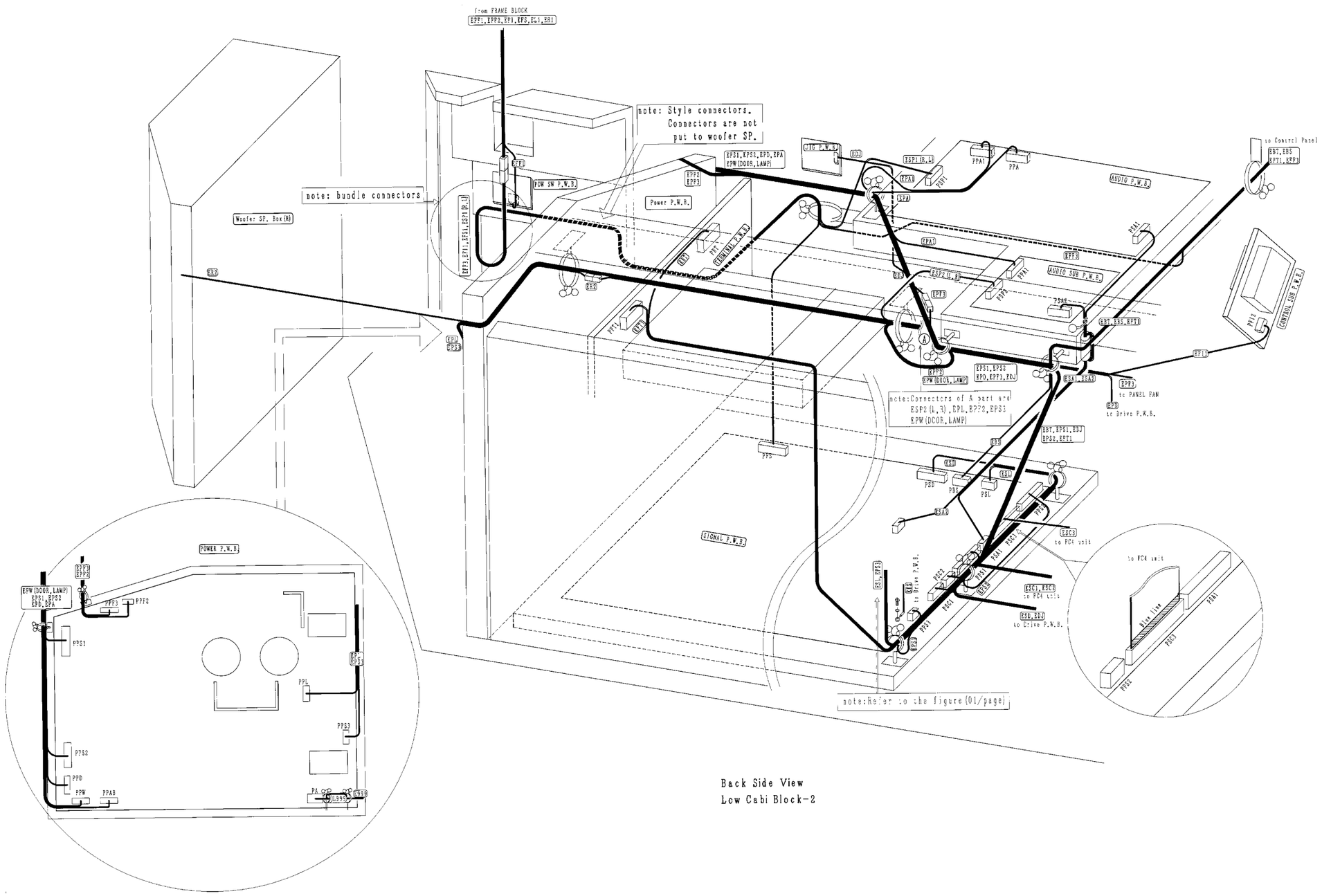

FINAL WIRING

3 of 4

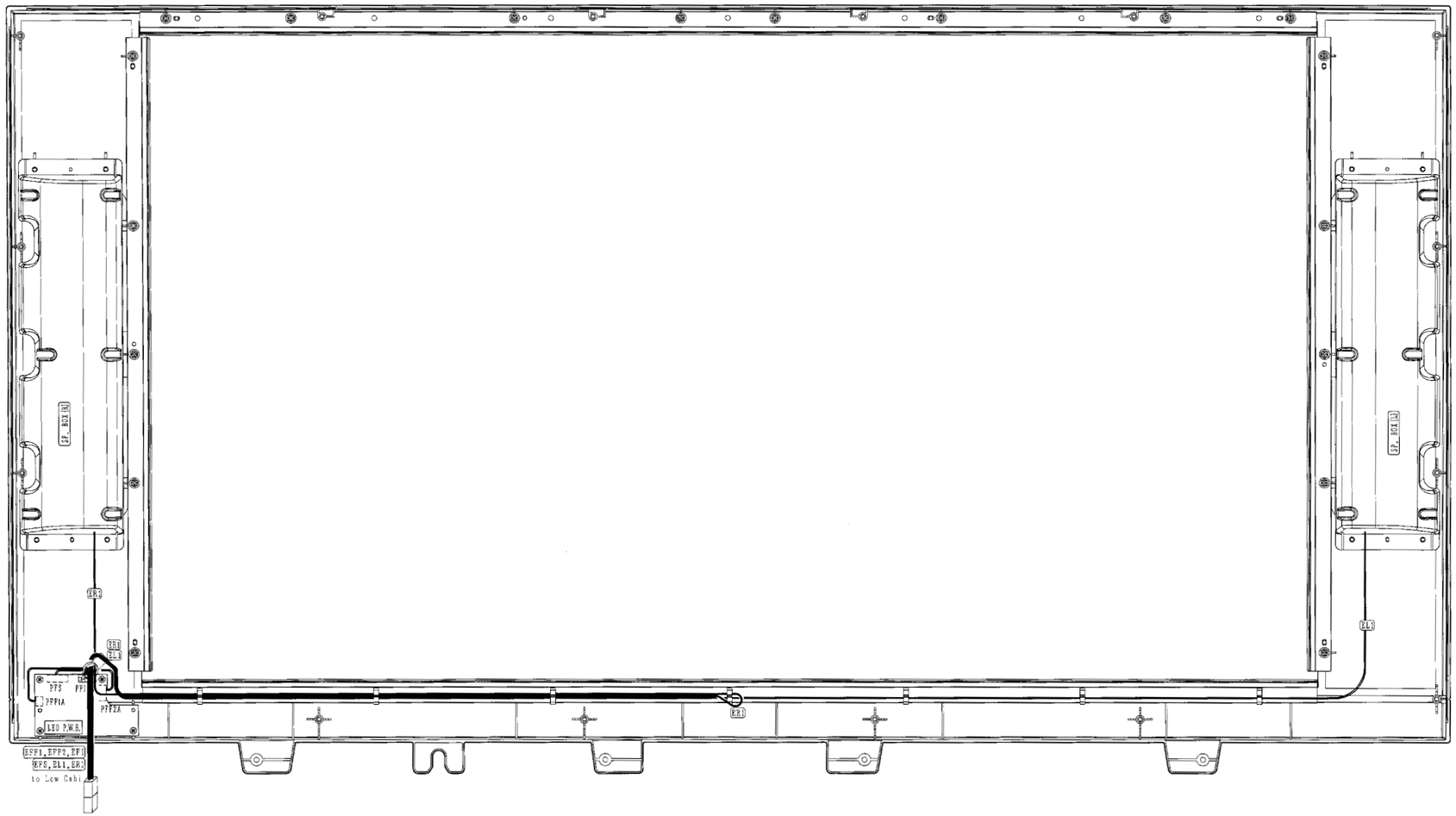

BACK SIDE VIEW
FRAME BLOCK

FINAL WIRING

4 of 4

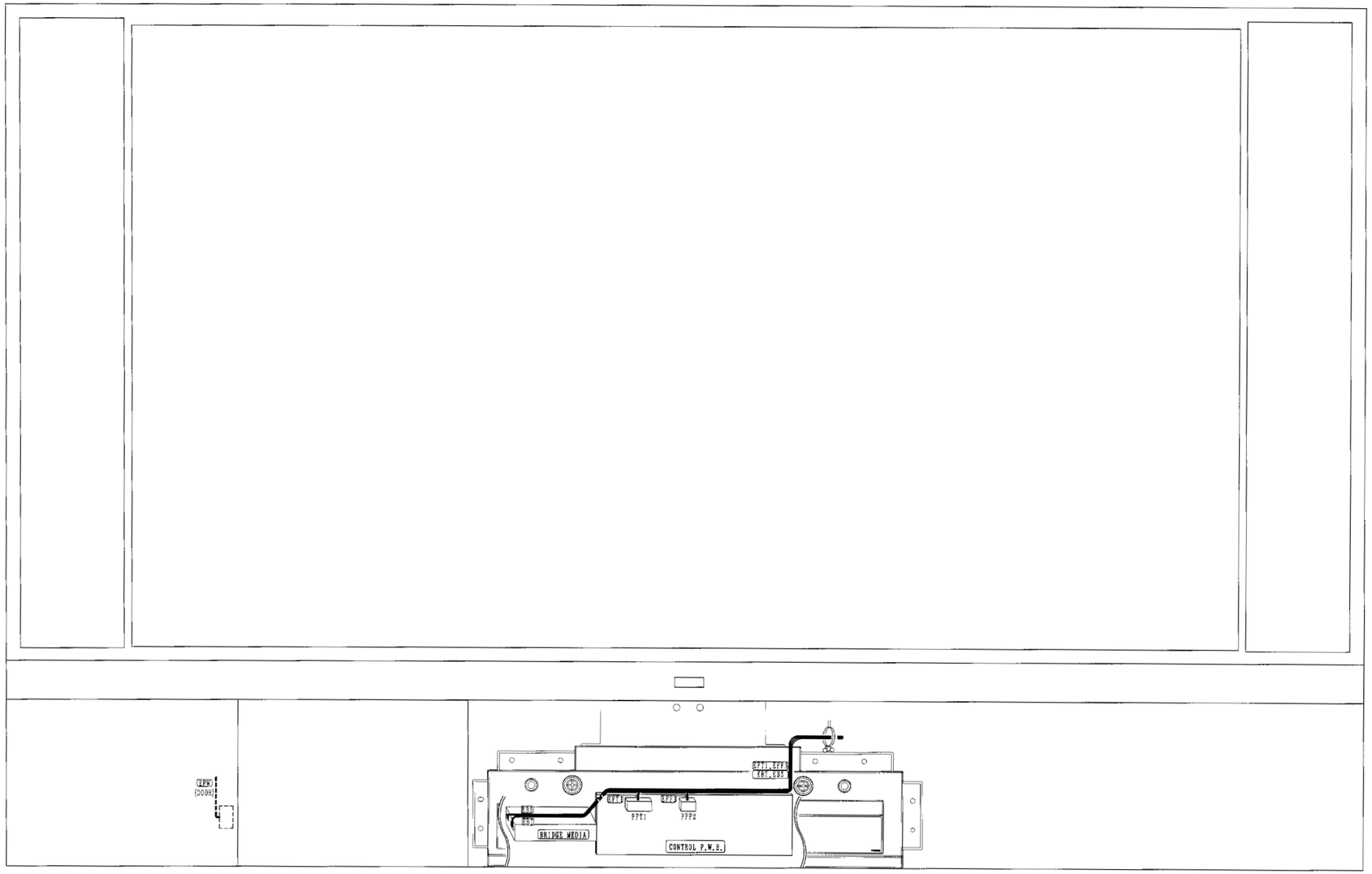

Front Side View

2.4 ICs and UNITs

No.	Symb No	P#	DESCRIPTION	FUNCITION	PWB
1	I601	CK38991U	M30624FGPFP	SUB-MICOM	DRIVE
2	I602	CK35894R	CAT24WC32J1		DRIVE
3	I603	CK37051R	BD4729G		DRIVE
4	I604	CK01872R	BU4053BCFV-E2		DRIVE
5	I605	CA01301R	TRS.CHIP NDC7002N		DRIVE
6	I701	CK37121R	THC63LVDF84B-R	LVDS RECEIVER	DRIVE
7	I704	CK37193R	SI-3033LSA-TL	3.3V REG.	DRIVE
8	I705	CK37191R	SI-3018LSA-TL	1.8V REG.	DRIVE
9	I706	CK38891U	CXD3536R	TIMING GENERATOR	DRIVE
10	I708	CK36501R	M24128-WMN6T		DRIVE
11	I709	CK34391R	SN74ACT244PWR		DRIVE
12	I710	CK34391R	SN74ACT244PWR		DRIVE
13	I711	CK38901U	CXA7005R	SAMPLE AND HOLD	DRIVE
14	I712	CK38901U	CXA7005R	SAMPLE AND HOLD	DRIVE
15	I714	CK37193R	SI-3033LSA-TL	3.3V REG.	DRIVE
16	I715	CK37193R	SI-3033LSA-TL	3.3V REG.	DRIVE
17	I717	CK38917R	SN74LVC32APWR		DRIVE
18	I718	CK38323R	SN74LVC1G**DCKR		DRIVE
19	I723	CK38901U	CXA7005R	SAMPLE AND HOLD	DRIVE
20	I724	CK38901U	CXA7005R	SAMPLE AND HOLD	DRIVE
21	I735	CK38901U	CXA7005R	SAMPLE AND HOLD	DRIVE
22	I736	CK38901U	CXA7005R	SAMPLE AND HOLD	DRIVE
23	I737	CK37218R	TK11150CSCL		DRIVE
24	I738	CK37406R	SI-3012KS		DRIVE
25	I001			TV mi-com	SIGNAL
26	I002	CK37051R	BD4729G		SIGNAL
27	I003	CK35894R	CAT24WC32J1		SIGNAL
28	I004	CK01872R	BU4053BCFV-E2		SIGNAL
29	I005	CK31071R	CXA1875AM		SIGNAL
30	I006	CK37412U	S3C80F9XKN-QZR7	IR BLASTER MASK	SIGNAL
31	I007	CK35893R	CAT24WC16J1		SIGNAL
32	I008	CK01872R	BU4053BCFV-E2		SIGNAL
33	I009	CK37216R	TK11133CSCL		SIGNAL
34	I010	CK38491R	MM74HCT245MTCX		SIGNAL
35	I011	CK01172R	HD74HC221FPEL		SIGNAL
36	I301	CK01872R	BU4053BCFV-E2		SIGNAL
37	I402	CK37406R	SI-3012KS		SIGNAL
38	I403	CP06541F	SI-3033C	3.3V REG.	SIGNAL
39	I404	CK37212R	TK11125CSCL		SIGNAL
40	I405	CK37216R	TK11133CSCL		SIGNAL
41	I453	CK37406R	SI-3012KS		SIGNAL
42	I504	CP05163F	SI-3090F	9V REG.	SIGNAL
43	IA01	CK38621R	NJM1160M-TE1		SIGNAL
44	IA02	CK33801R	NJM2068F		SIGNAL
45	IA51	CK01872R	BU4053BCFV-E2		SIGNAL

No.	Symb No	P#	DESCRIPTION	FUNCITION	PWB
46	IC01	CK01872R	BU4053BCFV-E2		SIGNAL
47	IC02	CK31041R	TA1287F		SIGNAL
48	IE01	CK31041R	TA1287F		SIGNAL
49	IE02	CK38102R	NJM2584AM(TE1)	VIDEO SWITCH	SIGNAL
50	U301	HC00512	F/E ENGE6106DR	MAIN TUNER	SIGNAL
51	U302	HC00464	FE-ENG36626G	SUB TUNER	SIGNAL
52	IV01	CK30941U	CXA2069Q		TERMINAL
53	IV02	CK07631R	TC90A45F		TERMINAL
54	IV03	CK34811U	MM1519XQ		TERMINAL
55	IV04	CK38102R	NJM2584AM(TE1)	VIDEO SWITCH	TERMINAL
56	IV06	CK01872R	BU4053BCFV-E2		TERMINAL
57	IV07	CK01872R	BU4053BCFV-E2		TERMINAL
58	IV11	CK31071R	CXA1875AM		TERMINAL
59	IY01	CK38701U	UPD64084GC-8EA-A	3D COMB	TERMINAL
60	IY02	CK37053R	BD4727G	RESET IC	TERMINAL
61	IY03	CK38721R	TA1383FG		TERMINAL
62	IY04	CK38721R	TA1383FG		TERMINAL
63	I901	CZ00868	HYBRID IC (STR-F6668B)	POWER SWITING	POWER
64	I902	CP08261U	H11A817B-300W		POWER
65	I903	CP08261U	H11A817B-300W		POWER
66	I906	CP05163F	SI-3090F	9V REG.	POWER
67	I907	CP05163F	SI-3090F	9V REG.	POWER
68	I910	CP08301	STA821M		POWER
69	I911	CP05164F	SI-3157F	15.7V REG.	POWER
70	I912	CP08111U	SI-8010GL		POWER
71	IAA1	2004751	TA8200AH	AUDIO OUTPUT AMP.	POWER
72	T901	BT02201	POWER TRANSFORMER LC37	SW. TRANSFORMER	POWER
73	U901	CW00352	UPM0518SA	STANDBY POWER	POWER
74	DM15	CH02721	PHOTO DIODE PNZ313B	IR RECEIVER	CONTROL
75	HM01	CZ01171	GP1UM281RK	IR RECEIVER	CONTROL
76	HM02	CZ01161	GP1UM281QK	IR RECEIVER	CONTROL
77	IAA2	2004751	TA8200AH	AUDIO OUTPUT AMP.	CONTROL
78	IM01	CP08281U	NJW2137D		CONTROL
79	IJ01	CK37193R	SI-3033LSA-TL	3.3V REG.	DVI
80	IJ02	CK37051R	BD4729G		DVI
81	IJ03	CK35163R	SII907BCQ52		DVI
82	IJ04	CA01301R	TRS.CHIP NDC7002N		DVI
83	IJ05	CK35895R	CAT24WC02J1		DVI
84	NA002	HA01231	POW-LAMP100/120W P.P	LAMP POWER UNIT	LQD3600
85	U401	CS00771	HCP151 ASS'Y	Flex controller	LUE2234
86	EANT	HP00771	ANT SW	ANTENNA SPLITTER	LUE2235
87	UBM1	CS00761	HCM001 ASY	BRIDGE MEDIA	LUE2237

LCD Rear Projection TV
Major Assembly Parts List - By Model

50V500

HA01231	Lamp Power Unit
UX21511	Lamp Assy
JT24141	Signal PWB Assy, (includes Terminal and DVI PWB)
JT24161	Power PWB
JT24171	Control PWB
UX22201D*	Optical Engine Assy, (includes Drive and FC4 PWB)
X480263	Audio PWB, (includes Main and Sub PWB)
UE22341	LC37 Chassis

50VX500 **This model has been changed to LC37-E chassis**

HA01231	Lamp Power Unit
UX21511	Lamp Assy
JT24143	Signal PWB Assy, (includes Terminal and DVI PWB)
JT24163	Power PWB
JT24173	Control PWB
UX22202D*	Optical Engine Assy, (includes Drive and FC4 PWB)
X480266	Audio PWB, (includes Main and Sub PWB)
UE22343	LC37-E Chassis

50V500A (same as 50VX500 except screen/cabinet)

HA01231	Lamp Power Unit
UX21511	Lamp Assy
JT24143	Signal PWB Assy, (includes Terminal and DVI PWB)
JT24163	Power PWB
JT24173	Control PWB
UX22202D*	Optical Engine Assy, (includes Drive and FC4 PWB)
X480266	Audio PWB, (includes Main and Sub PWB)
UE22343	LC37-E Chassis

60V500A

HA01231	Lamp Power Unit
UX21511	Lamp Assy
JT24144	Signal PWB Assy, (includes Terminal and DVI PWB)
JT24164	Power PWB
JT24174	Control PWB
UX22203D*	Optical Engine Assy, (includes Drive and FC4 PWB)
X480265	Audio PWB, (includes Main and Sub PWB)
UE22344	LC37-F Chassis

60VX500 (same as 60V500A except screen/cabinet)

HA01231	Lamp Power Unit
UX21511	Lamp Assy
JT24144	Signal PWB Assy, (includes Terminal and DVI PWB)
JT24164	Power PWB
JT24174	Control PWB
UX22203D*	Optical Engine Assy, (includes Drive and FC4 PWB)
X480265	Audio PWB, (includes Main and Sub PWB)
UE22344	LC37-F Chassis

* suffix 'D' added to indicate Dud Fee is now included

Hitachi LCD Rear Projection TV
Optical Engine Removal
Procedure

Pop off front grill.

Remove 4 screws holding front plastic piece w/ power button.

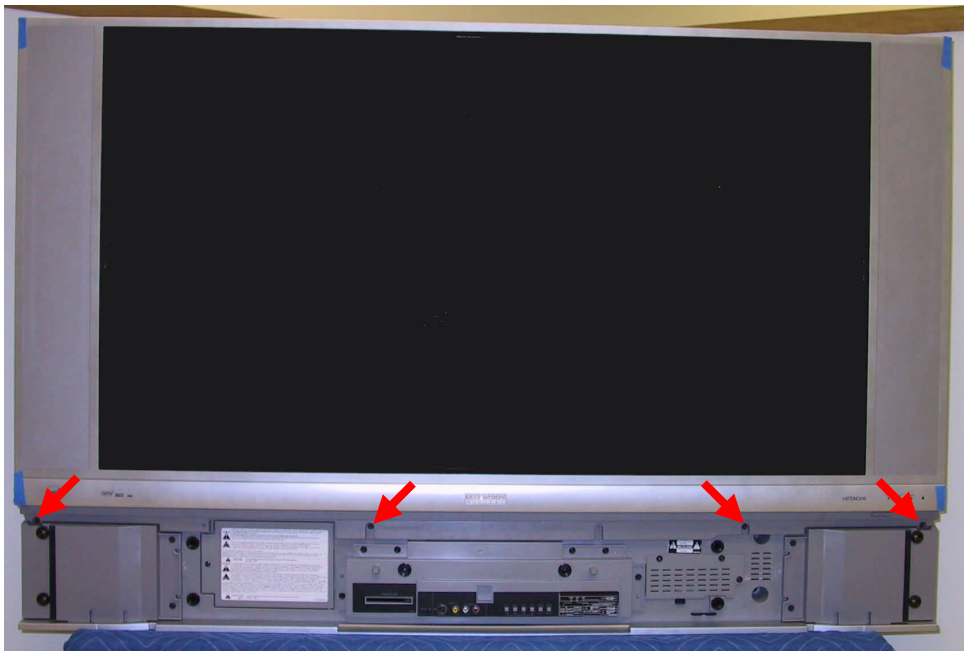

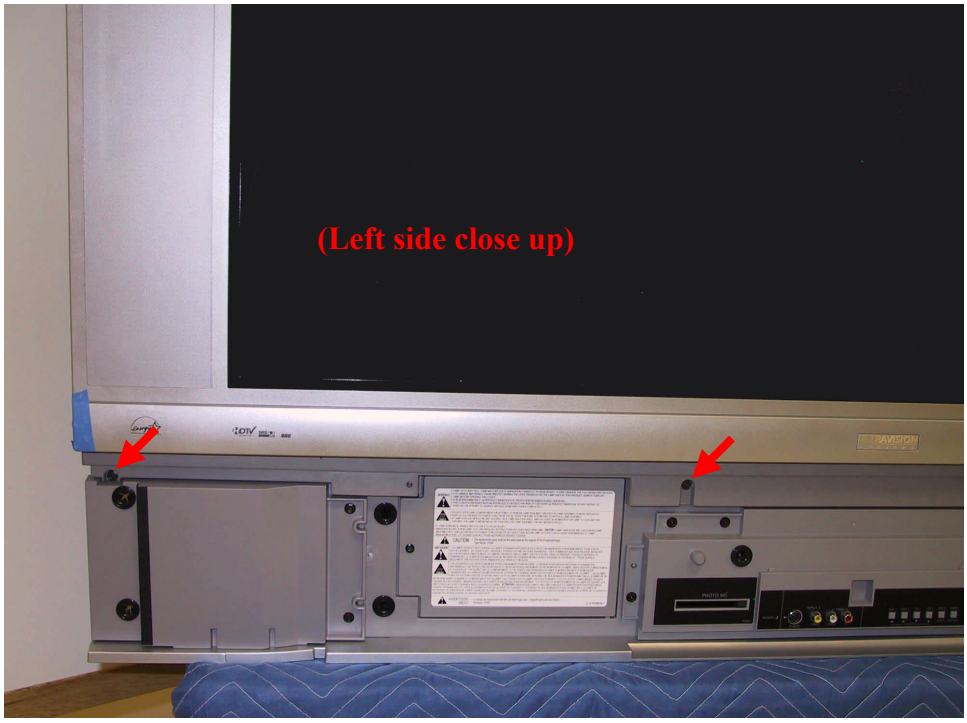
(Left side close up)

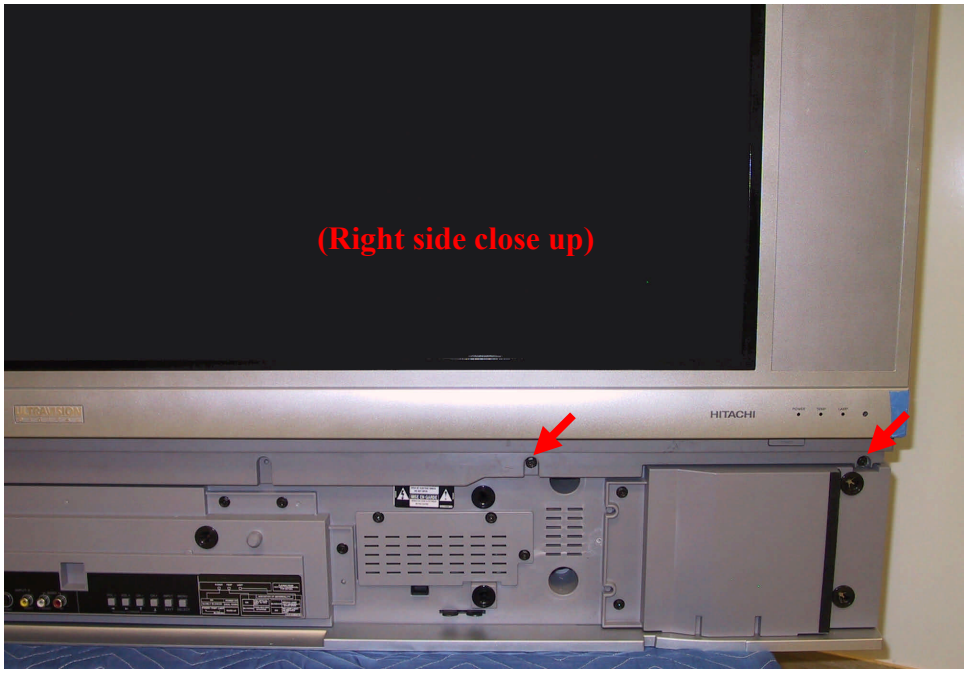
(Right side close up)
HITACHI

Remove 4 screws holding top cabinet front.

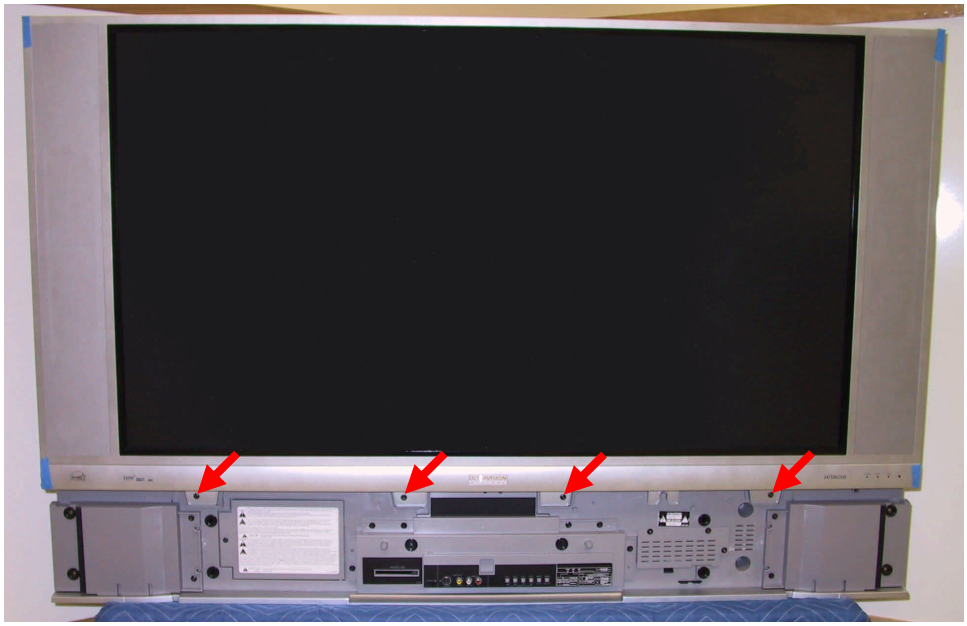

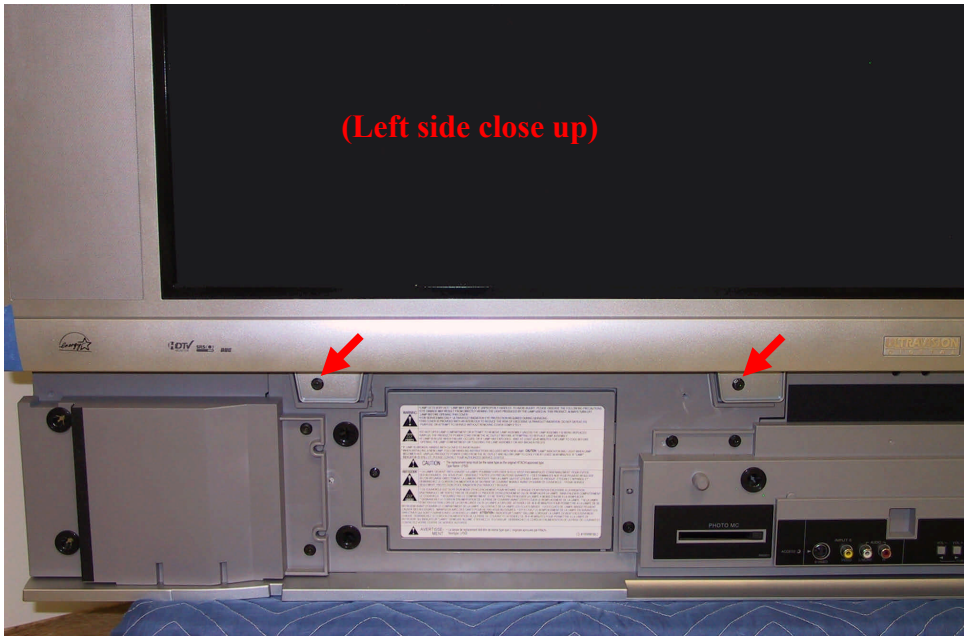

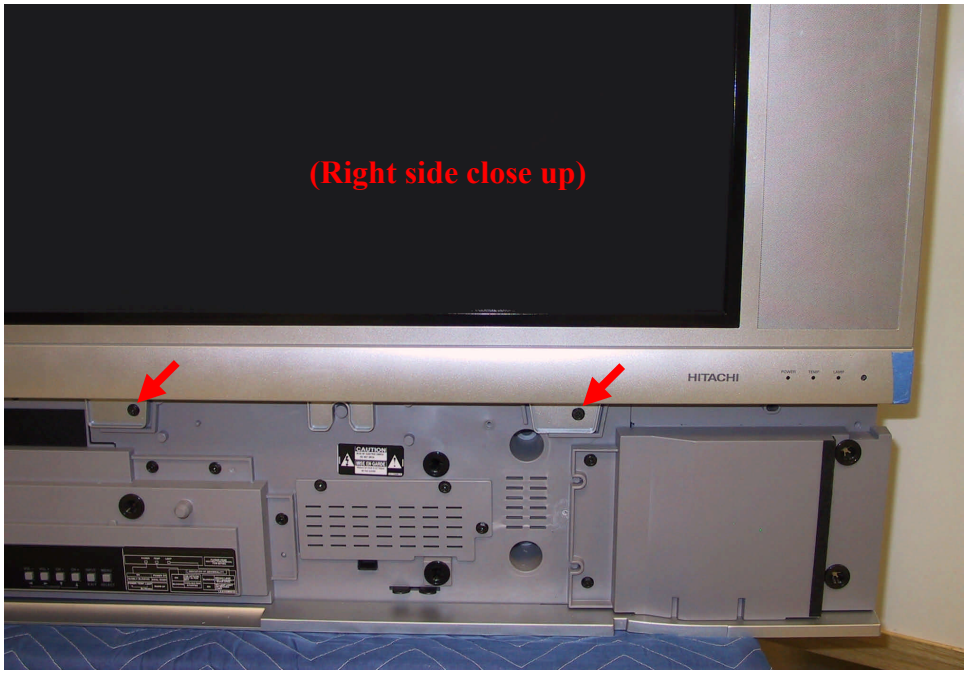
(Right side close up)
HITACHI

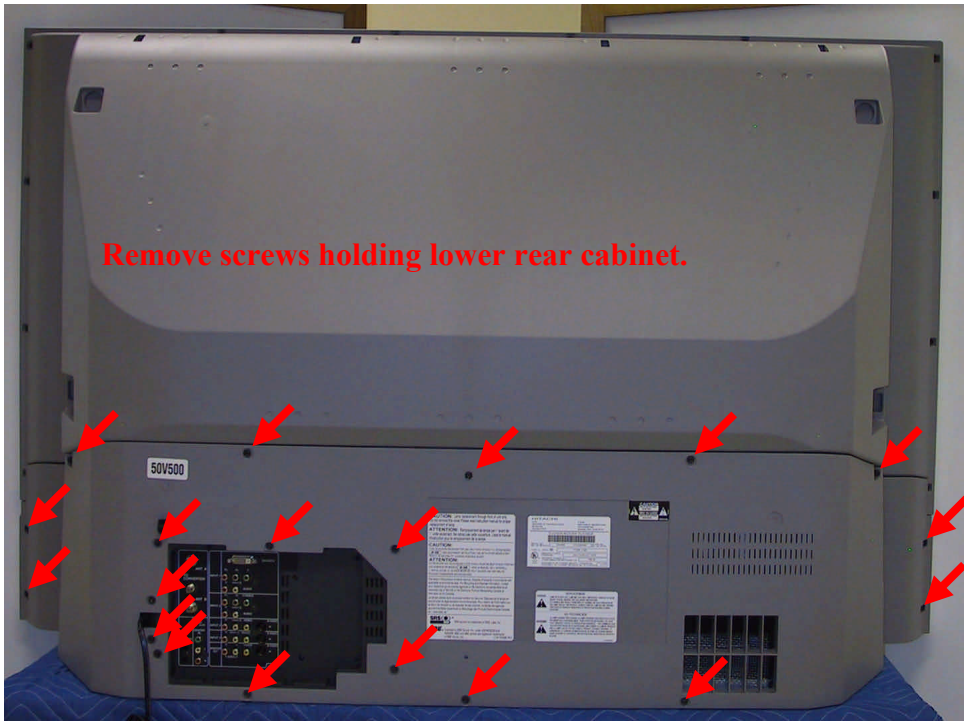
Remove screws holding lower rear cabinet.
50V500

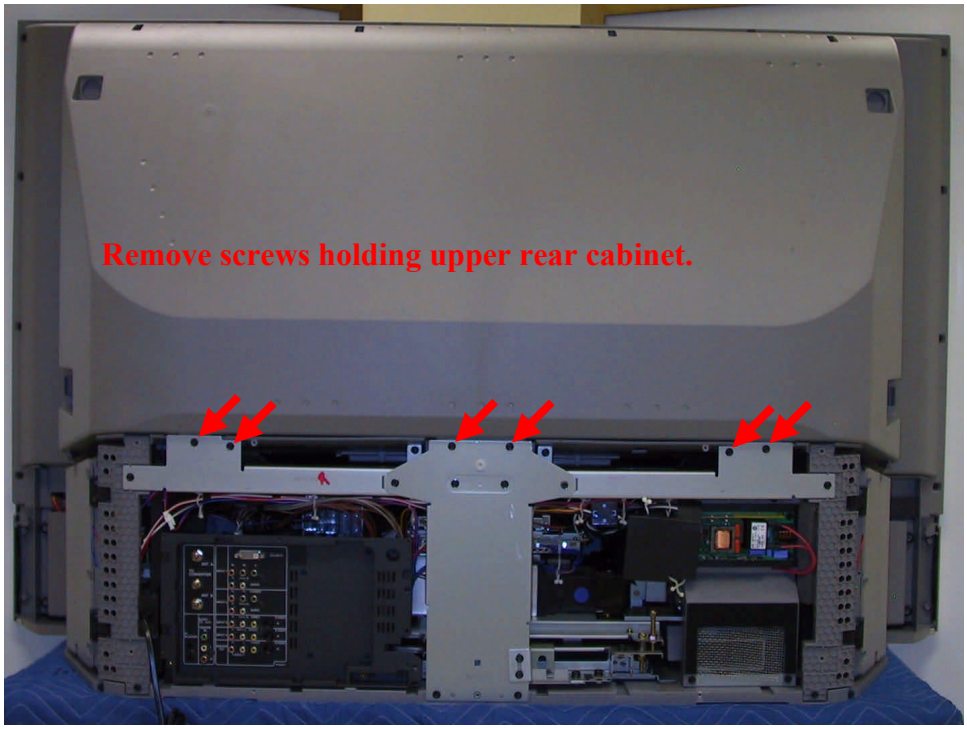

Remove 2 screws holding right subwoofer.

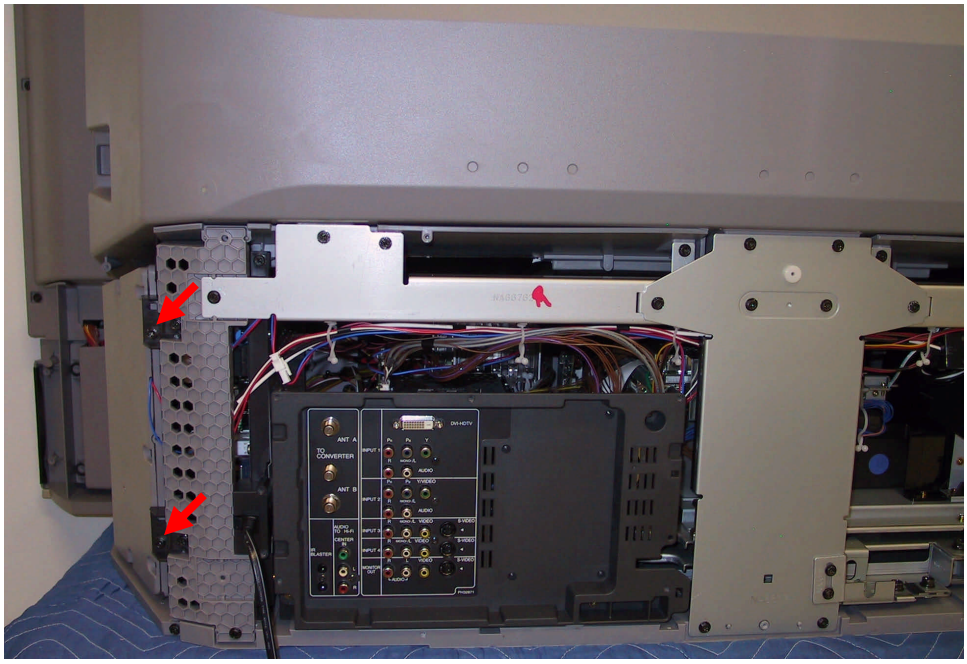

Pull out subwoofer as shown, to access
the upper cabinet wires.

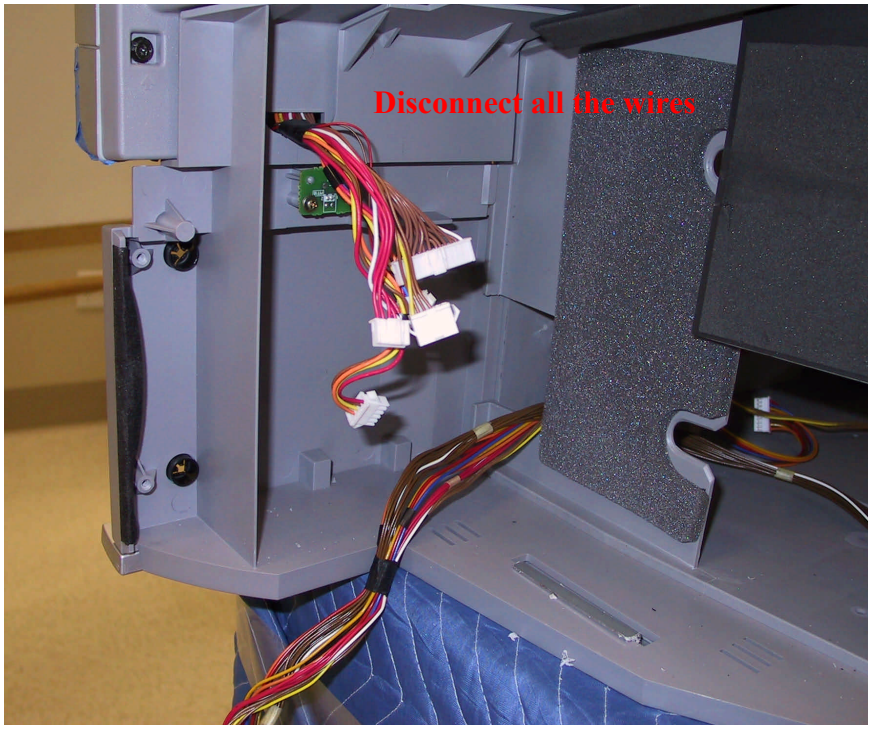
Disconnect all the wires

Now lift the top straight up. (2 person lift!)

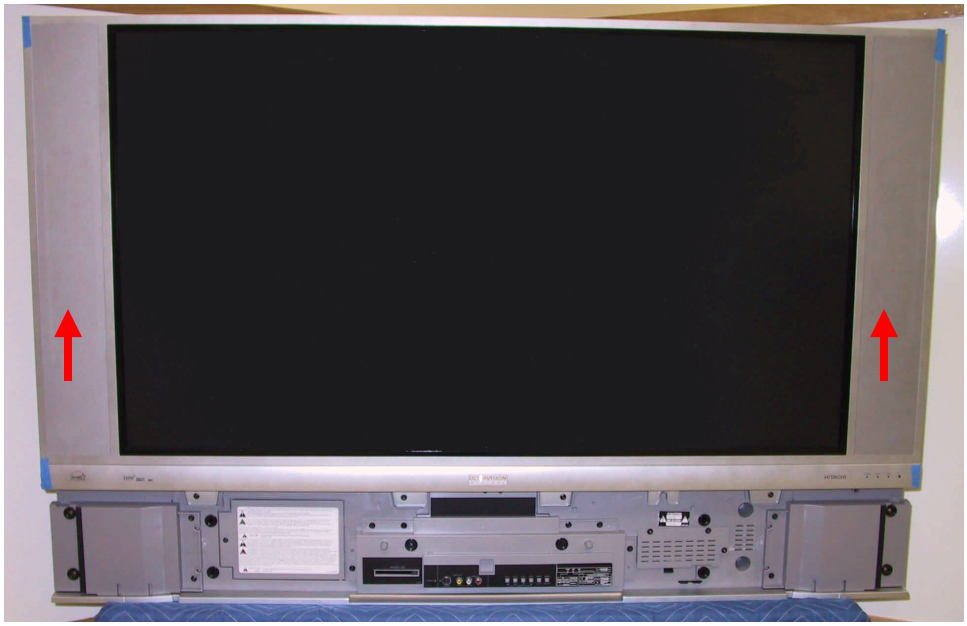

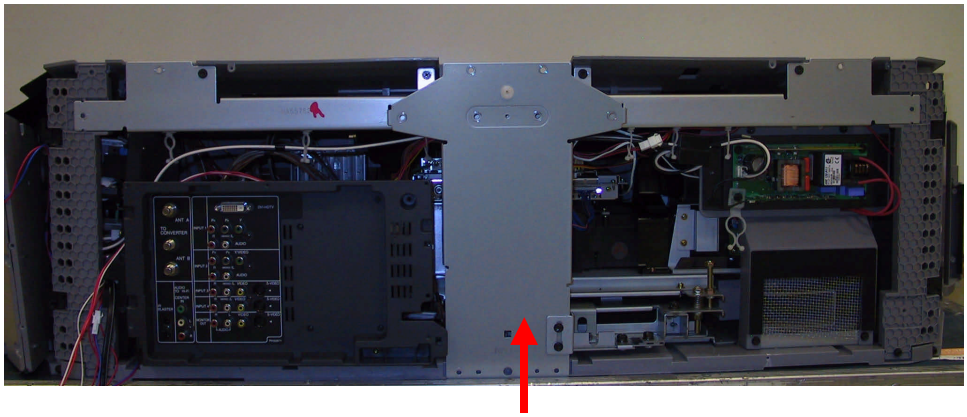

Remove this bracket

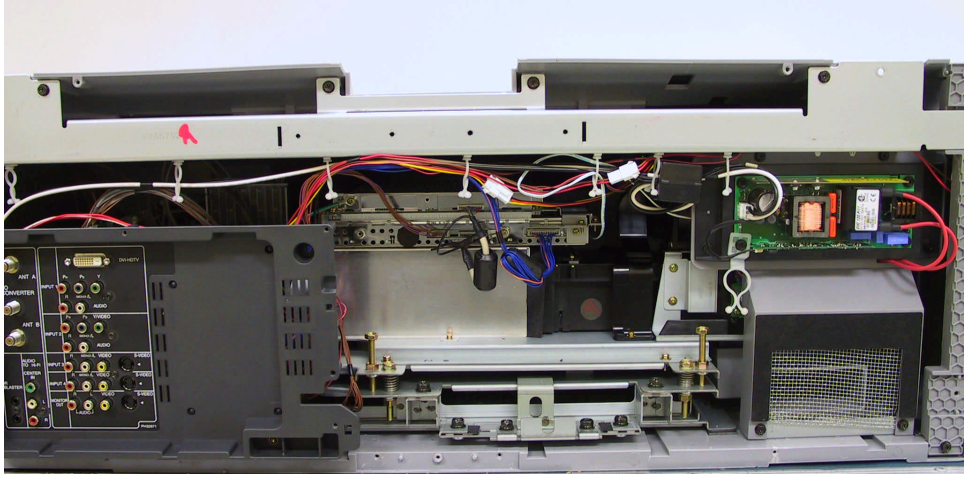

Bracket removed

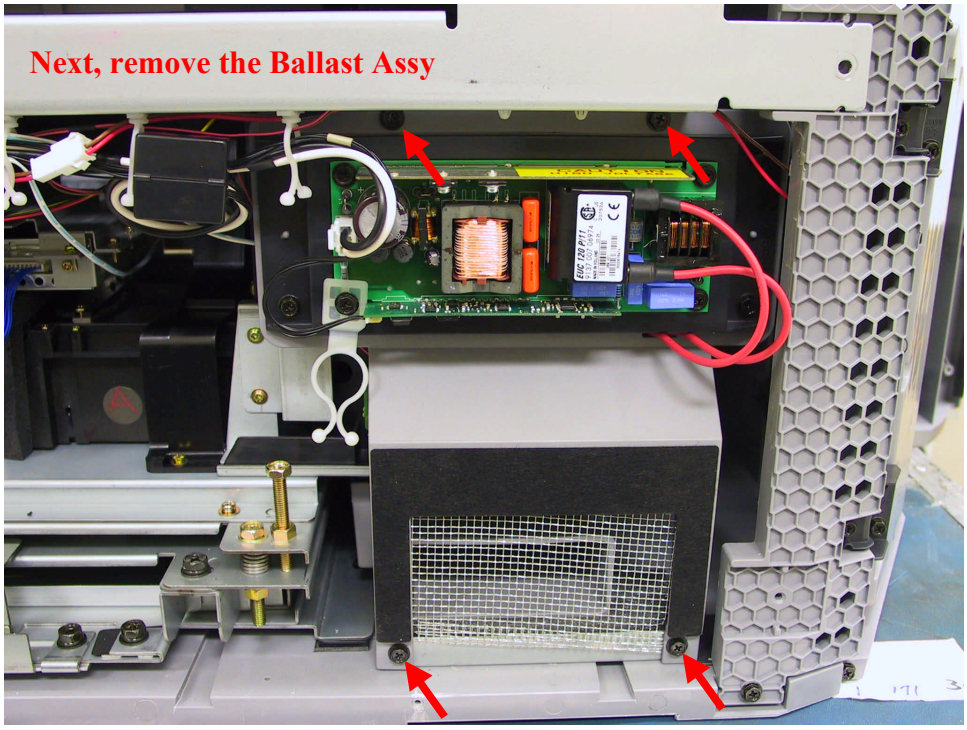

Remove Lamp Switch PWB

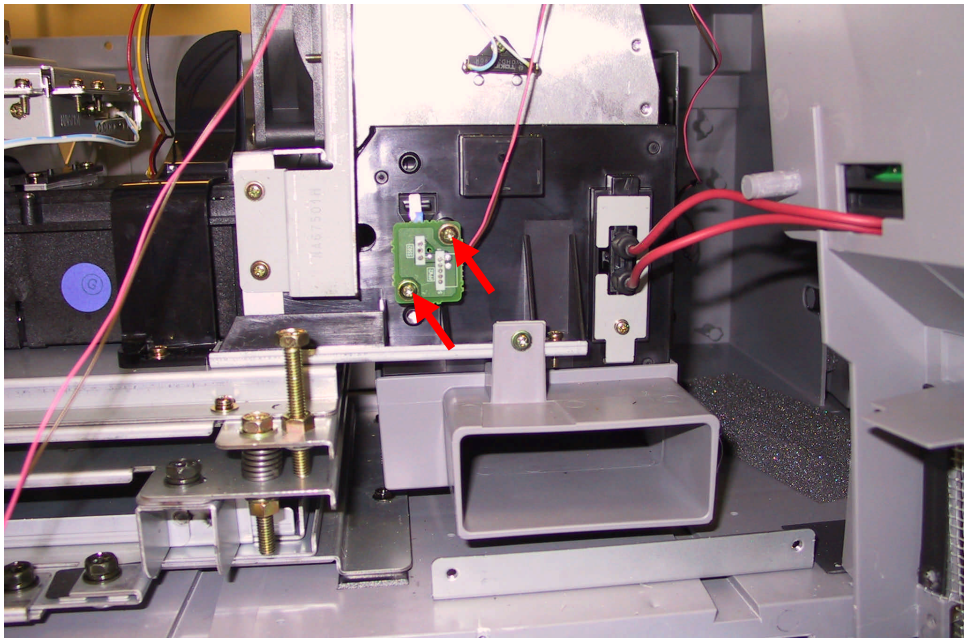

Remove Lamp Power Connector retaining bracket, then Lamp Power Connector

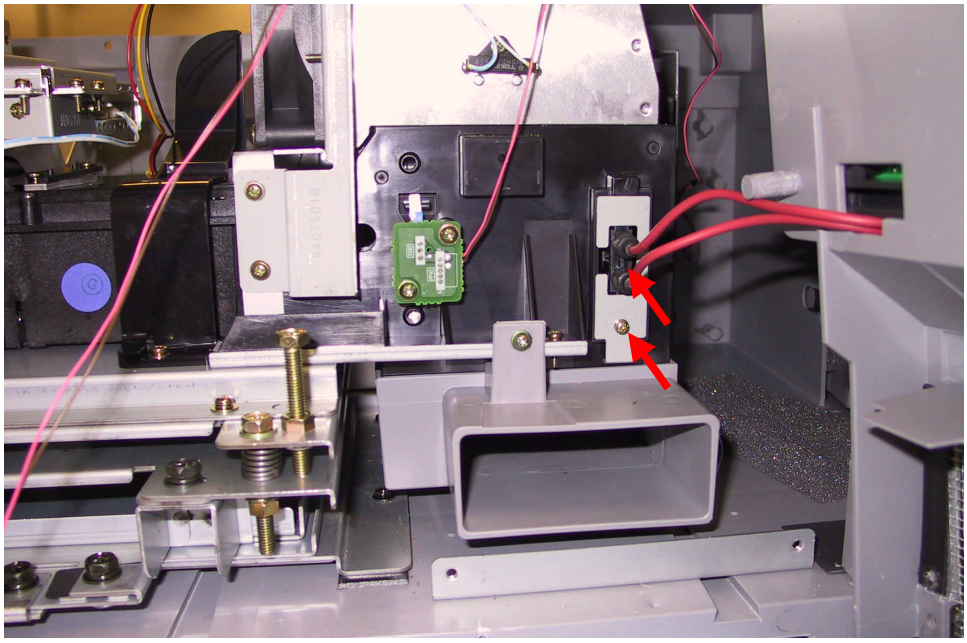

Remove Fan Exhaust Housing (back screw is hidden in this view)

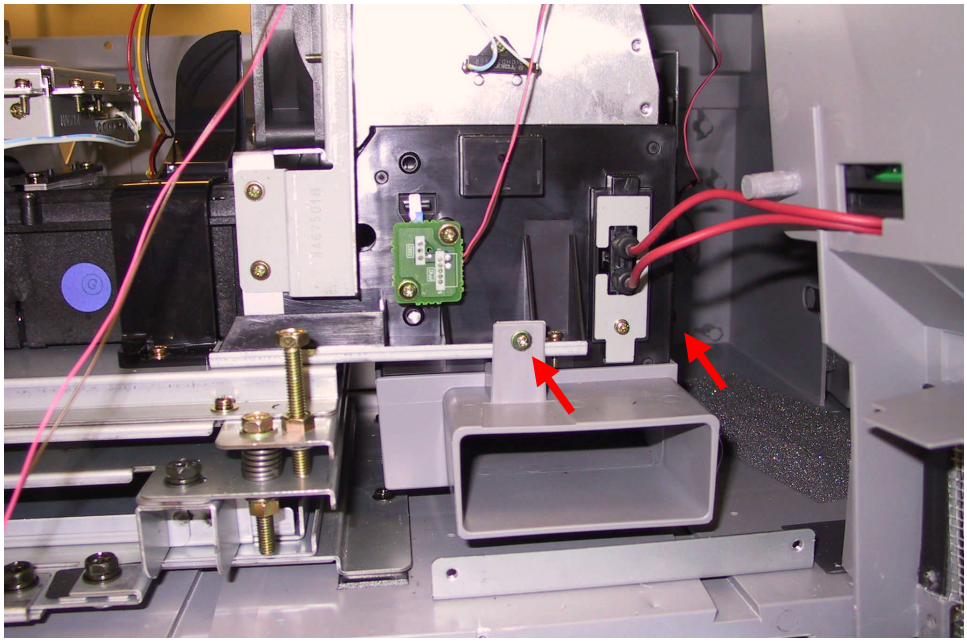

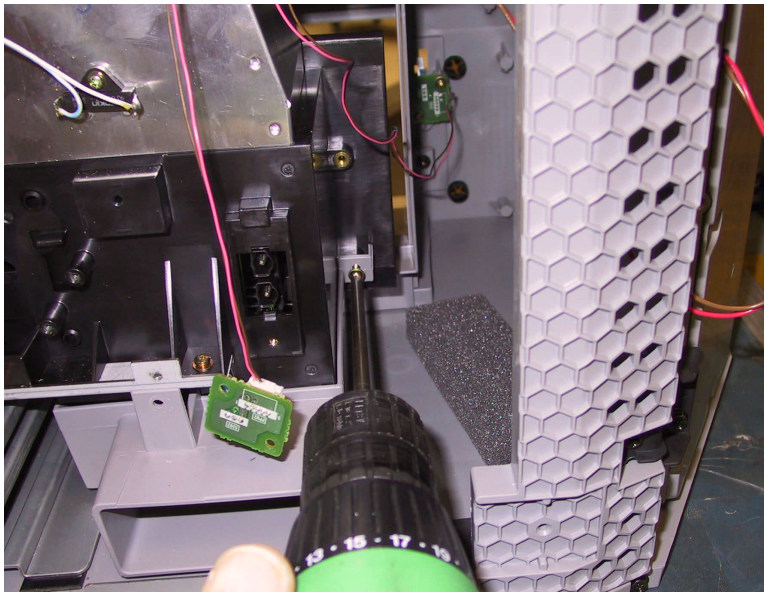

Another view of Fan Exhaust housing, showing back screw

Remove the 5 screws holding down the Engine Assy. Use a stubby #2 Philips head as needed

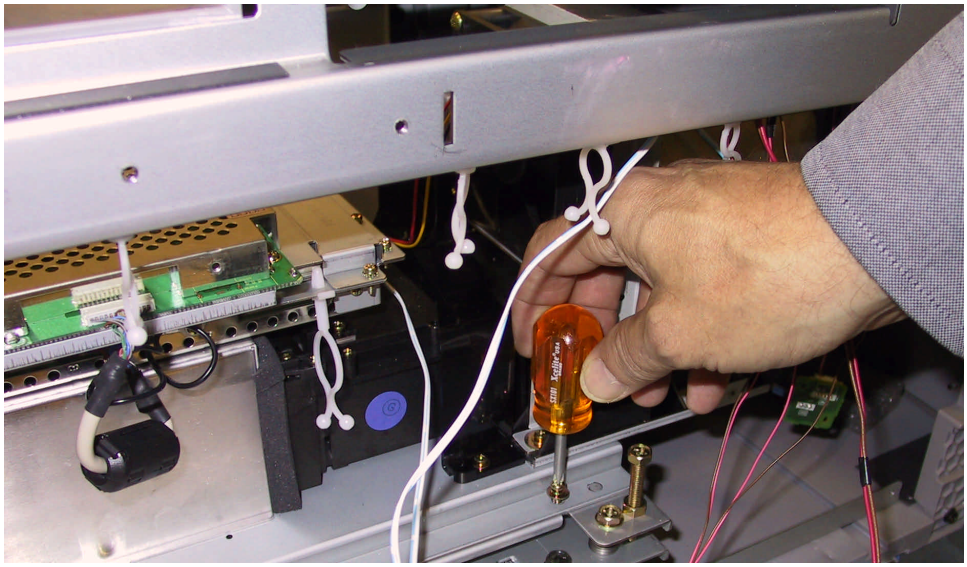

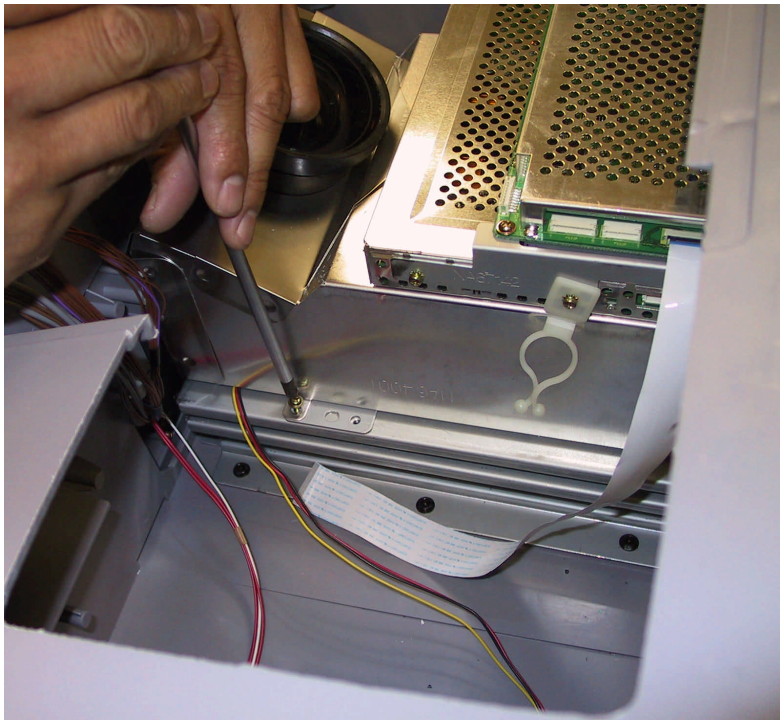

Remove upper bracket, so Engine assy can be pulled out the back.

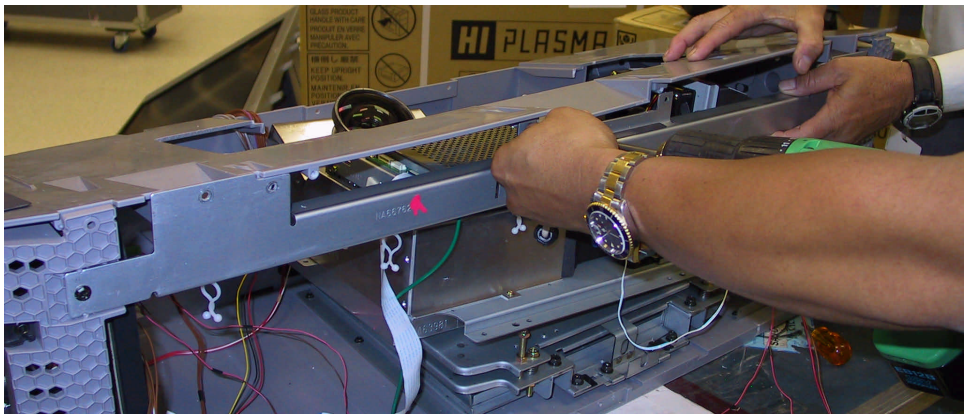

Install new Engine Assy, reassemble in reverse order of disassembly

HITACHI